VISUAL METHODS
IN
EDUCATION

To M.E.C.

A MODERN DISCIPLE OF COMENIUS

VISUAL METHODS
IN
EDUCATION

By

W. L. SUMNER

Reader in Education, The University, Nottingham

THE ALL INDIA COUNCIL FOR SECONDARY EDUCATION
4/19, Asaf Ali Road,
NEW DELHI

BASIL BLACKWELL OXFORD

1956

First Edition 1951
Second Edition 1956

PRINTED IN GREAT BRITAIN
BY A. T. BROOME AND SON, ST. CLEMENT'S, OXFORD
AND BOUND BY THE KEMP HALL BINDERY, OXFORD

PREFACE

THIS book is an attempt to meet a need in schools, training colleges and other educational institutions. In surveying a large field, and one which fortunately is growing every day, the author has selected his material so that fundamental principles have had some consideration. Inevitably there have been omissions in a work no larger than this. Accordingly bibliographies have been given, so that those who wish to make a special study of some branch of the work will find suitable reading material.

The glamour of elaborate optical aids has tended in recent years to obscure the sterling value of good blackboard and pictorial work and the author hopes that he has sufficiently stressed the great importance of this.

The contents of the book are founded on the courses of lectures and demonstrations given by the author in the post-graduate course in education and advanced courses for teachers at the University, Nottingham.

In the present volume the author has limited himself to *visual methods* in education and even here the treatment has been that of fundamental principles only. Visual education, the appreciation of the visual arts and the film in particular, have been regarded as generally outside the scope of this work. Nevertheless, the author hopes that the prime importance of art in education will be kept in mind, and that where the *means* of teaching have been mentioned in this book they will not be mistaken for the *end* in the greater sphere of education. In order to relate this work of limited aims to a larger pattern a bibliography of works on *visual education* has been given at the end.

The book has dealt with visual methods primarily as they apply to work in schools, but much of what has been said should concern adult and other forms of education with equal force.

The author wishes to express his thanks to Messrs. Flatters and Garnett of Manchester; G. B. Equipments, Ltd.; Aldis

Ltd.; Bausch and Lomb of Rochester, New York; the American Optical Company, Buffalo; the Controller of H.M. Stationery Office; Messrs. Allen and Unwin; Miss B. R. Winstanley, Director of the Derbyshire School Museums Service; Mrs. Neurath of the Isotype Institute; and to his friends and colleagues, Professor G. Patrick Meredith of Leeds University; Dr. M. M. Lewis, Director of the Institute of Education, Nottingham; and Mr. G. H. Gopsill, whose expert knowledge of the uses of visual methods applied to Geography teaching has been of great help.

W.L.S.

Second Edition

Some corrections have been made and the bibliographies have been extended.

May, 1956. W.L.S.

CONTENTS

CHAP.		PAGE
I.	Visual Methods and Education	1
II.	The Eye and the Mind	20
III.	Visual Tools for Teaching and Learning...	39
IV.	Visual Methods and Language	65
V.	The Principles of Optical Projection	82
VI.	The Cinema in Education	129
VII.	The Organisation of Visual Aids	200
Appendices		214

‘ Where there is no vision the people perish.’

Proverbs, 29, 18.

CHAPTER I

' Nihil est in intellectu, quod non prius fuit sensu.' *Aristotle.*

'A thousand hearings are not as good as one seeing.'
An old Chinese proverb.

' The foundation of all learning, consists in representing clearly to the senses, sensible objects, so that they can be appreciated easily.'
Comenius.

THE eye is the most important gateway to the mind. For most people the visual impression is the one which can be most easily interpreted, is the most lasting and relates most readily to other sensory experiences.

Visual education may be considered from two standpoints. Firstly, we may think of the use of visual aids to teaching and learning as a part of a larger scheme of pedagogic method. Here the visual aid is used to assist exposition, to give illustrations and exercises for verbal statement, to provide ' secondary ' experiences where direct experience is not available, to give practice in the use of pictorial language and its translation into other languages and so on. Here we see visual illustration not as an end in itself but as a tool in the teacher's workshop. We see the teacher developing the uses of hearing, sight, touch, the neuro-muscular sense in general, and even of taste and smell as aids to learning; we see him encouraging the co-ordination of these sense impressions and their use in thinking and reasoning.

The second aspect of visual education is the use of the eyes and the mind to create and explore experiences which produce a sense of richness of meaning, satisfaction or even pleasure in the individual who has ' eyes to see ' and ' a mind to understand '. The mental reaction of visual experience is both intellectual and emotional. Pictures can be used to explain a variation of a quan-

tity with time, as in a graph, or they can be used as in advertisements to produce amusement, fear, envy or desire. In the first case we could call the mental activity *cognitive*, and in the second *orectic* (affective and conative). Many pictures produce a more comprehensive mental activity which includes both cognitive and orectic functions. Apart from academic discussions these two aspects will normally be combined.

One of the main shortcomings of both teaching and learning is the use of words without a full understanding of their meaning, separately and in relation to other words, and without the possibility of using them as vehicles of a system of thought, which should be capable of development. Such an unintelligent use of words, which often involves the repetition of that which has been learned by rote, has been called ' verbalism '. Enthusiasts in the cause of visual aids in education have looked to them to redeem teaching and learning from the folly of ' verbalism '. At the outset it would be well to say that visual aids can never *replace* methods which require processes of thought conceived in verbal terms. People differ in the amounts and intensities of experiences which they receive through different sensory channels. Formerly, educational psychologists divided human beings into visuals, audiles and tactiles (tactuals) (i.e. those who learn most through eye, ear and touch respectively) and it was recorded that about 80 per cent of people learnt chiefly through their eyes. Modern psychology has modified this crude trichotomy, but it remains a fact that in the whole pattern of sensory experience one channel will predominate in some individuals more than in others, and in the majority of people it is the sense of sight through which they learn most.[1] The unintelligent use of visual aids can produce a disease analgous to verbalism which we could call ' pictorialism '

[1] An excellent example of this is to be found in Fowle's fine book, ' Ear Eye and Hand in Harmony Study '. There is no royal road to learning to play the piano, but Fowle has shown how the co-ordination of the senses and the intelligent use of the whole sensory pattern will improve musicianship and increase the speed of effective learning.

or in extreme cases ' eidetism ', that is, the use of patterns, pictures, shapes, etc., and their reproduction from memory without any knowledge of their meaning or the possibilities of using them to extend schemes of thought. Many of the same difficulties attend the use of both words and pictures, *but the use of each may be made to react favourably on that of the other.* This is a most fruitful field for visual aids in education.

In the history of mankind, the development of a verbal language brought with it great opportunities for thinking easily and conveniently, and for expressing and conveying those thoughts. Signs and pictures were not then so necessary for conveying a meaning. It is said that Red Indians used to say at night ' Come over to the fire so that we can see what you mean '. In Shakespeare's ' Two Gentlemen of Verona ', Lance, of low verbal intelligence, can only convey a meaning (his parting from his family) by using his shoes, staff and hat as symbols for his parents, sister and the maid. But when words became so easy to use they tended to stand in the place of things, and the full meaning and properties of these things were forgotten. ' The Chinese people worshipped their aunt's sister ', said the boy who had not been able to think about the meaning of a new word. Whenever man has struggled to perfect new media of expression, such as the use of words, algebraic symbols and processes, printing or the cinematograph, there has always been the tendency for these great gifts (which, under favourable circumstances, can be used for increasing his understanding and the richness of his mental experience), to reduce his effort, make him passive and confuse means with end.

Again, memory, which is of necessity associated with learning, is not to be thought of in terms of a separate function with which some are and some are not endowed, but rather is it associated with interest. The learner should know the importance of an idea to himself, have an intelligent grasp of its inner meaning so that it can be extended and can grow organically, and finally it

should seem to be purposive and forward-looking. Without these basic attainments verbalism is the result.

The Development of Educational Theory in respect to Visual Aids

The Greeks and Romans developed their thinking in terms of words. Pictures and symbols were for decorative or memorial purposes only. The processes of teaching on the one hand and of learning on the other were conducted in verbal terms. Rhetoric and logic were rated highly. When Rome fell and the light of learning was kept burning in the west by the Church it was preserved in the form of words, spoken and written. Dialectic, that is, the spoken thesis and antithesis of master and pupil (or of one authority and another), was the method of arriving at conclusions. Symbols and pictures were used to express in elaborate form the eternal truths for those who had eyes to see, but no attempt was made to relate the spoken and visual language. The discovery of the art of printing, which was primarily concerned with words, further extended the verbal system. Moreover, learning was undertaken by rote, without reference to significance and meaning. Such pictures and illuminations as were used were purely decorative and might even serve to detract from the meaning of the words. Amongst the scholars or those with learning, words and words only were the currency in the transactions of one mind with another. Words and forms of words came to be an end in themselves, and not only a means to an end.

Before man developed speech as a means of communication and used words to help him to think, he had discovered how to express himself in terms of drawings, signs and symbols. A drawing, a model or a graven image made concrete and permanent ideas which were fleeting, and conceptions which, only with difficulty, could be expressed in words.

Man uses languages of various types to convey meanings and as vehicles of thought. Translation from one language to another

therefore becomes a matter of great importance. In the picture we see an ancient seal in which the same ideas are expressed at the edges and in the middle in different languages.

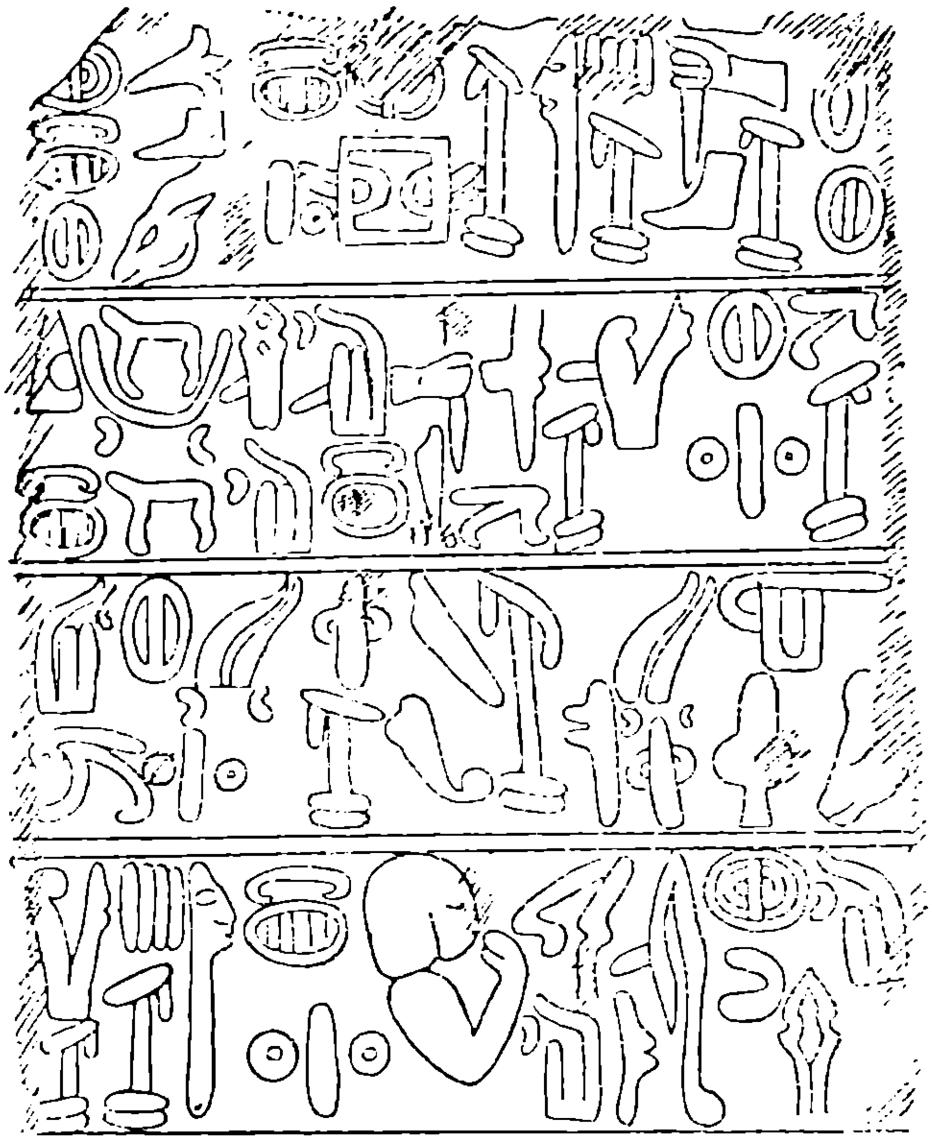

FIG. 1.

On the left is an example of ancient Hittite writing from Hama in Syria. On the right is a bilingual seal of a Hittite king with pictograms in the centre and cuniform syllabic signs round the margin. From *Bodmer Loom of Language.*

The remarkable cave drawings of wild animals which have been found in France, Spain and elsewhere show that man could express his thought in drawing long before he could write or even make articulate speech. We can follow the use of pictorial, model and symbolical language in a readily accessible way in the Old Testament, where models and symbols such as the Ark of the Covenant are used.[1]

Plato had constantly asked what lay behind the words used to describe things, and in what way could be interpreted the real

[1] See also Ezekiel, Chapter 4 for the use of a model to convey an idea and make it understood.

meaning of the sensory impressions of sight, touch and sound. But for many centuries the senses and their evidence were distrusted and thus true knowledge of the objective world often became latent and perverted. 'The scholastic age was a supreme example of concentration of the intellect.' The keen-edged mind and fervent industry of its scholars fastened on some fundamental questions of the universe and sought out with incredible pains all that the wisdom of the past could contribute to their solution, but ' the beauty of sense seemed irrelevant to what they were seeking '.[1]

The Renaissance brought with it a new respect for the senses, and for their use in finding new knowledge. This has so often been quoted in the case of the great resurgence of inductive and experimental methods depending on observations, in science, that it is perhaps necessary to point out that this was only one phase of a much larger intellectual movement affecting many branches of human endeavour. Vives,[2] Ratke,[3] Rabelais and Montaigne[4] clearly understood the value of personal experience in education and they realised that a picture was second best to perception of the object itself. Rabelais (1483–1553) advocated instruction through the senses, and had many a sly dig at the old Schoolmen. Gargantua writing to Pantagruel bids him constantly observe Nature; he must know all the fowls of the air and the fishes in every sea, river or fountain.[5] A contemporary of his, John Holt, in his book Lac Puerorum (Milk for Children) insisted on the correct grounding in Latin Grammar but showed how it could be done symbolically by the use of the hands and fingers.

The medieval schoolbooks were extremely dull, but it must

[1] Helen Wodehouse, 'A Survey of the History of Modern Education'.

[2] Juan Luis Vives (1492–1540) See Foster Watson ' Vives : On Education (1531)'.

[3] Wolfgang Ratke (Ratichius, Ritich) (1571–1635) instituted a new system of language teaching based on Bacon's induction theories. He had considerable influence in German and Dutch Universities. See Quick : Educational Reformers.

[4] Essais (1580). [5] Gargantua and Pantagruel (Book 2, Chapter 8).

not be imagined that illiteracy was so widespread that the stained glass windows, figures and symbols which adorned the churches were always a substitute for the words which the faithful could not understand.[1] The nature and method of the elementary instruction commonly found at the close of the sixteenth century may be gathered from the 'English Scholemaister' by Edward Coote, published in 1596. The book served both as a text-book for the pupil and a guide to the teacher. The contents include syllables for spelling and punctuation, a disputation between two boys as an exercise on what they have learned, a religious catechism, prayers, psalms and metrical psalms and some doggerel verses. Many children in fact, a far greater proportion than was formerly supposed, were taught to read but they were not given any help in the task of building up a picture of the world.

Erasmus (1466–1536) who was born about a century before Galileo, valued classical studies because he saw in them the light of reason and the possibility of a universal language by which all Europe might enjoy the free communication of ideas; but he appreciated the necessity of visual and practical studies, including 'the natural history of birds, quadrupedes, wild animals, serpents and fishes'. Earlier in the 15th century, Vittorina de Feltre,[2] tutor of the Lord of Mantua gives a model lesson. The picture of an elephant attacked by a dragon is presented. The master states the Greek name, which is identical with the Latin; he gives the nominative and the genitive, 'elephantus—i': then the name of the trunk both in Greek and Latin. He then describes the tusks, giving the product—ivory, and the process of breathing. The teacher proceeds to an account of the combat between the two beasts and gives any other particulars which may be suggested by the questions of the class.

Francis Bacon (1561–1626), the poet, the prophet and the journalist of the New Philosophy, only had an incomplete know-

[1] J. W. Adamson, 'The Illiterate Anglo-Saxon'.
[2] (1378–1446).

ledge of the great work, founded on experiment and observation, which was going on about him, but in '*The Advancement of Learning*' he looks forward to an expansion of the syllabus and the use of instruments and apparatus. Education should cultivate 'a just and legitimate familiarity betwixt the mind and things'.

Although it is more than three centuries since John Amos Comenius (1592–1670),[1] bishop and teacher in Poland and Hungary, wrote his great works on teaching, many of his ideas seem quite modern. Very important is the careful and liberal equipment of the school. Let plenty of good textbooks and other requisites be supplied, to save the teacher's labour and to avoid disorder and waste. In particular, provide for things to be presented to the senses. All books should be illustrated and the school should have copies or models of everything about which the scholars are to learn. 'He who has once seen a rhinoceros (even in a picture) can remember it more easily than if it has been described to him six hundred times.' There are limitations to

[1] Worthy of mention are the educational playing-cards of Dr. Thomas Marner (1475–1537) the satirist and opponent of Martin Luther. These appeared in 1507 and were intended to aid pupils in the art of logic. These 'Chartiludium Logicae' were successful at first but later like their unpopular author they were forgotten with him. Cardinal Mazarin, faced with the problem of amusing and teaching the backward Louis XIV at the age of 8, used a set of pictorial playing cards and later Desmaritz designed a pack to assist the teaching of History and Geography in France, and subsequently the idea spread to England.

In 1568, Jost Ammon, a contemporary of Comenius produced a well-illustrated work, Eygentliche Beschreibung alle Stände, which depicted the trades and occupations of his time. His pictures are better than those of Comenius.

The first recorded map since 168 A.D. was made in 1280 in the Benedictine monastery of St. Albans. It was utilitarian in purpose and its aim was to show pilgrims the shortest route to Dover. The most famous medieval wall map was the Herefore map, made by Richard of Belleau in 1280. The Gough map of 1335 was drawn to aid the three Edwards in their wars with Wales, Scotland and France. Engraved copper plates which were superior to wood-cuts in many ways appeared at the middle of the fifteenth century and in 1473 they were used for printing maps. Four years later a collection of copper engravings of Ptolemy's Cosmographia was published in Bologna.

The first book with visual aids to appear in England was a Latin-English glossary of Lord Londesborough in 1470. The illustrations were crude but vivid.

Comenius's methods, as there are to the manner in which visual aids are used by many teachers to-day. The pupil is in a receptive state which may lead to passivity. The visual method does not necessarily lead to creative thought and activity. In his Orbis Pictus, Comenius produced for the first time an illustrated *text-book*. It contains about a hundred and fifty lesson topics and each is illustrated with a picture. Many of them are not directly related to a child's experience, but at least they deal with the practical aspects of everyday life such as gardening, making bread, preparing food and so on. In his preface to this book Comenius says :—

'1. Let it be given to children into their hands to delight themselves withal, as they please, with the sight of the pictures and making them as familiar to themselves as may be, and that even at home before they be put into school.

2. Then let them be examined ever and anon (especially now in school) what this thing or that thing is, and is called, so that they may see nothing which they know not how to name, and they can name nothing which they cannot show.

3. And let the things named them be shewed, not only in the pictures but also in themselves; for example, the parts of the body, clothes, books, the house, utensils, etc.

4. Let them be suffered also to imitate the pictures by hand, if they will. Nay, rather let them be encouraged that they may be willing . first, thus to quicken the attention also toward the things and to observe the proportion of the parts one toward another, and lastly to practice the nimbleness of the hand, which is good for many things.

5. Things rare and not easy to be met withal at home might be kept ready in every great school, that they may be shewed also, as often as any words are to be made of them, to the scholars. Thus at last this school would indeed become a school of things obvious to the senses, an entrance to the school intellectual.'

Comenius saw that schools should extend the experiences of the child in his home. He anticipated some of the modern methods of teaching geography, wherein a series of questions which have been carefully graded and tested are used with each picture. Comenius also realised the necessity of encouraging older children to use their observations made by the intelligent use of the senses to make generalisations.

Comenius wrote the original Orbis Pictus in High Dutch. During the Thirty Years[1] War (1618–1648), the Moravian brethren visited many European countries and Comenius had opportunities of showing his methods and work in Germany, Sweden, Holland and England. In 1658, Charles Hoole translated Orbis Pictus, and for a century it was the most popular work of its kind in Europe. Comenius's fame as an educationist was widespread and he was even invited to become President of 'Harvard College'. In 1693, Locke stressed the need for visual aids in the teaching of *young* children. It is interesting to note that the Primary School Report[1] advocates the use of the pictures in the way which had been described by Comenius more than three hundred years previously.

In 1762, Rousseau published his *Emile ou de l'Education*, a work which grew out of his attempt to give advice to a mother concerning the upbringing of her child. 'What do the pedagogues teach? Words! Words! Words!' he said. Rousseau made a plea for a form of education which should take into account the nature of the body and mind of the child and his reactions to his surroundings, which should be rural and simple. The senses are not only a gateway for impressions, but are a part of the machinery of action of adjustment to, and control of, environment. 'Our first instructors in science are our feet, hands and eyes.' Rousseau's romantic account of his flights of fancy as a tutor is full of extravagances but his influence was far-reaching. He was aware of the evils of verbalism current in his day and he attacked them in a stimulating and forceful manner.

[1] H.M.S.O., 1931.

The Taylor. LXII. Sartor.

The *Taylor*, 1. cutteth *Cloth*, 2. with *Shears*, 3. and seweth it together with a *Needle* and *double thread*, 4.	*Sartor*, 1. discindit *Pannum*, 2. *Forfice*, 3. consuitque *Acu* & *Filo duplicato*, 4.
Then he presseth the *Seams* with a *Pressing-iron*, 5. And thus he maketh	Posteà complanat *Suturas Ferramento*, 5. Sicque conficit
Coats, 6.	*Tunicas*, 6.
with *Plaits*, 7.	*Plicatas*, 7.
in which the *Border*, 8. is below with *Laces*, 9.	in quibus infra est *Fimbria*, 8. cum *Institis*, 9.
Cloaks, 10.	*Pallia*, 10.
with a *Cape*, 11.	cum *Patagio*, 11.
and *Sleeve Coats*, 12.	& *Togas Manicatas*, 12.
Doublets, 13.	*Thoraces*, 13.
with *Buttons*, 14.	cum *Globulis*, 14.
and *Cuffs*, 15.	& *Manicis*, 15.
Breeches, 16.	*Caligas*, 16. ali-
sometimes with *Ribbons*, 17.	quando cum *Lemniscis*, 17.
Stockins, 18.	*Tibialia*, 18.
Gloves, 19.	*Chirothecas*, 19.

FIG. 2
A PAGE FROM COMENIUS'S *Orbis Pictus*

It has been said of 19th century education that it began at the bottom and at the top, and finally met in the middle. There was a wide gulf fixed between the 'Public' Schools such as Rugby, Shrewsbury and Winchester, and the schools which provided the bare rudiments of the three R's for the poor. Nevertheless it was

in the latter that the first ideas of visual methods of teaching began. The Public Schools, when they were rehabilitated by the influence of Samuel Butler the elder and his masters at Shrewsbury, of whom Arnold, later of Rugby, was one, were too tied to the disciplines of the classics with their deductive and dialectic methods, to admit visual education.

Henry Dunn, who later became an important figure in Kay Shuttleworth's mid-19th century schemes for the training of teachers, wrote the Normal School Manual, or the Principles of Teaching, when he was Secretary in 1839 of the British and Foreign Schools Society. Here is a quotation from it :—'A child has a very different, a much more perfect idea of that which it sees, than it can have of anything which is incapable of being perceived by the senses; its conceptions are generally vague and indistinct. A model, a graphic representation, an outline or a diagram will suffice, but something of the kind must, if possible, be presented. . . . It is in many respects of the highest importance to teach children to discern the most minute differences and resemblances in objects which they can examine; the eye, the ear, the touch, the taste, the smell, should all be educated, by exercise on a great variety of objects. If the perceptive faculties be not carefully cultivated, it is impossible that the conceptions of a child can either be ready or accurate.' He added that nothing can be more absurd than to place before a child a blue lion, or other similar caricature of nature and he also saw the value of simple school museums and that everything should be done to encourage teachers to form collections.

The novelist Dickens was not impressed by the ' secondary experiences provided by the schools ',[1] and doubtless many of the early pictures were of a poor quality and were often very misleading. Poor woodcuts and over-elaborate engravings were often of negative value.

[1] An excellent example is that of Mr. Gradgrind in ' Hard Times ' (Chap. 2) teaching the ' definition ' of a horse.

The Development of Some Materials of Visual Instruction

Writing and drawing materials have always been a problem wherever learning developed. In view of the fact that the expense of these was so great for many centuries, there was little encouragement for the teacher to use them if he could stretch his verbal methods far enough. In the 14th and 15th centuries wax tablets or tables coated with wax were used by advanced students, and notes were taken down by the use of sharp scribing tools or pointels.[1] Documents dating from the early 14th century preserved in Merton College, Oxford, advertise: 'Divers pairs of tablets for the grammarians to report the arguments twopence-half-penny, and ivory at three-halfpence each.'

In the 12th century, the scribe is pictured with a scraper in one hand and a 'pen,' in the other. The vellum was an expensive substance and it was possible to scrape away previous writings two or three times to prepare the surface for new inscriptions.[2] In the middle of the 14th century, paper was about 5d. a quire in London and Oxford and as this was the equivalent of at least ten shillings in modern reckoning such a price was prohibitive to most scholars. From 1356 to 1361 the price rose to 1s. a quire. Blotting paper dates from about 1465 in England and was in use in schools in 1612. Until the end of the 16th century paper would cost more than all the other expenses of a school using it, and more than the usher's wages. Sir John Spilman, Queen Elizabeth's jeweller, started a paper factory in Deptford and the price came down.[3]

[1] The pointel was sometimes used as a weapon of attack, e.g. Higden (1332–1364) relates 'that gentle scholar Johannes Scotus, surnamed Erigen, was killed in a class-room brawl'. Another report says: 'John Scott was slayne with poyntels of childer who he taught at Malmesbury.' Such were the hazards of the schoolmaster's life.

[2] To the despair of modern scholars who are often more interested in the original writing than in the later palimpsest. The skill of the ultra-violet and infra-red photographer has done remarkable things but it cannot catch that which has been entirely obliterated. For a picture of the scribe (Eadwine) see the facsimile of 'The Cambridge Psalter', edited by James and published by 'The Friends of Canterbury Cathedral'.

[3] It is an interesting topic for debate to consider how far cheap printing of

The need for a cheap surface, from which writing or drawing could be quickly removed, was felt from early times. Moist earth and sand on horizontal surfaces must have been used in this way before the time of recorded history. The sand-table is of great antiquity and was popular in the Middle Ages for the working of simple reckoning. When the figures were used for arithmetical calculations (algorism) the sand-table was often used. Trevisa in the 1578 edition of *Higden's Polychronicon* describes it as ' the table with the wiche schappes (shapes) beeth portrayed and i-peynt in powdre '. The table was also used without sand and reckoning could be performed with counters. (The bead-frame or abacus for counting and reckoning was used before the present era. Terra-cotta reliefs are preserved which show it in use in butchers' shops in Roman times). The blackboard, which was originally a dark counting-board set up vertically, is first mentioned by Brinsley in *Ludus Literarius* in 1612.[1]

Comenius gives a wood-cut of a blackboard in use in his *Orbis* in 1658 and it is included in every edition until 1770. This useful teaching tool was not used in English schools until the 19th century. A slate blackboard was used in the Infant School, Meadow Street, Bristol, about the year 1800 and is depicted in D. G. Goyder's *Manual*.

It is claimed by the Dutch that about the year 1350, Laurens Janszoon Coster of Haarlem, Holland invented the art of printing and it is believed that the first work produced by this new method was a school book. Developments in Germany by Gutenburg (c. 1436) and in England by William Caxton (1422–1491) had effects on the dissemination of knowledge which it is impossible to estimate, in spite of the fact that the numbers of copies of works were limited and the books were by no means cheap.

every type of book and paper has tended to encourage superficial reading and a failure to think for a sufficient length of time about the matter which has been read.

[1] Tavern scores were chalked up from the beginning of the 16th century. The phrase ' mind your P's and Q's ' relates to the practice of distinguishing pints and quarts by their initial letters on such boards.

The reproduction of diagrams from wood or ivory cuts and the use of carved signet-rings may have suggested the possibility of reproducing letters, words and finally pages of printed matter. With the development of printing the effective reproduction of pictures also progressed. Lines which were cut into hard polished surfaces of wood and metal (pewter and copper) could be made to take up ink, which could be transferred to paper in a press, after the superfluous ink had been wiped from the free surface of the block. This is the basis of a method which has been used for printing pictures, diagrams and music for more than four centuries.

Lithography, in spite of many poor manifestations of its use, was a notable invention in the history of visual illustration. Alois Senefelder (born in Prague in 1771) discovered a method of drawing on prepared limestone surfaces with a greasy crayon, and then, by treating with chemicals, ensuring that the lines of the picture alone took up ink, which could be transferred to paper to give high quality (though reversed) reproductions. In the mid-nineteenth century photographic methods of using the principles of lithography were developed, and the great chemical and optical advances in that century made possible, from the year 1888, the production of half-tone photographic blocks which would give satisfactory reproductions, provided that good surfaced papers and fine screens were used. Here again cheapness and mass-production often led to the abuses of the method and resulted in poor quality ' reproductions ' of negative educational values.

The development of new pigments, new writing materials, paper in myriad forms and colours, new surfaces and means of making them, new photographic methods going hand in hand with mechanical improvements, progress in chemistry and optics which are the handmaids of most pictorial processes, have contributed to give us a wealth of possibilities which teacher and publisher must use fully, economically and with a striving toward perfection.[1] ' Illustration is like decor in the ballet, one of

[1] A short, accurate and well illustrated account of the development of the

several arts planned by a team of artists. Dance, drama, music and design together make a spectacle in which each has its share. Similarly, type, paper, binding and illustrations must all contribute to the art of the book.'[1]

A lead pencil, probably made from an impure alloy of the metal, is described by Konrad Gerner of Zürich in *De Fossililum Genera* (1565). English Antimony (Stimmi Anglicalum) became more popular than lead owing to the blacker mark which it left. (It was also popular in other forms because of its alleged medicinal properties). Such '*lead*' pencils were occasionally used in schools in the early 17th century. Brinsley in *Ludus Literarius* suggests the use of black-' lead ' (plumbago, a form of carbon) held in the hollow of a quill for making notes. It is possible that graphite was sometimes called English antimony.

No attempt has been made to give more than an outline of the history of the development of some materials for visual instruction (and as far as this concerns optical methods, it will be indicated in the appropriate section), but enough has been said to show that the development of educational thinking concerning the problems of learning and teaching, in particular that which concerned what was ' worth while ', had to go hand in hand with the development of suitable tools for teacher and taught. It may be that we, in the middle of the 20th century, have a tool-chest which is bewilderingly large, so large in fact, that some of the timid diffidently sample only one or two of the tools, and others use them all, but fail to make a useful article. The teacher who knows his job selects exactly those tools which he needs for the task in hand and uses them effectively with his eye on the greater functions of education.

We may sum up in the words of Patrick Meredith :[2] 'A school is an embodiment of many inventions. It benefits by mechanical

applications of photography will be found in ' The Kodak Museum ' (1947) which is the handbook of the Kodak Museum at Wealdstone, Harrow, Middlesex, a visit to which is earnestly recommended to the enthusiastic teacher who is interested in visual matters. Also see Gernsheim : The History of Photography (O.U.P.)

[1] Philip James. English Book Illustration, 1800–1900.

[2] G. P. Meredith : Visual Education and the New Teacher.

processes such as printing, manufactured substances such as paper, scientifically designed appliances such as spectacle lenses, metallic machines such as clocks, expression techniques such as oil painting, techniques of graphic and symbolic representation such as cartography, algebra and the decimal system, labour saving calculi such as logarithms, the elimination of inconvenient variety as in standardisation of time-keeping; the organisation of human activity for discovery and creation as in the development of scientific method and systemisation of ideas as in Newton's "Principia", the use of arithmetic in the regulation of human affairs by the application of statistical method, at first to social phenomena, later to educational measurements as in our examination system, and finally the chemical, optical, mechanical and electrical complex of inventions whereby the child to-day, without leaving the class-room, can be translated to the ends of the world.'

The conception of education as a hard discipline with a rigid insistence on the three R's in the elementary schools, and the classics with mathematics in the 'Public' Schools, did nothing to advance the cause of 'visual aids'. The revolution in educational theory and practice which stresses the position of the learner rather than that of the teacher, and which has examined anew the process of learning in terms of the child's psychological and physical nature, his interests and his sensory development, has shown the need for visual education. Along with this have come improvements in printing, photography, mechanical and optical devices which should be used for educational purposes. Progress will not result from the passive acceptance of these aids to thought; it is absolutely necessary that we should ensure at every step that they result in an improvement in the quality of the learner's thinking, and make a real extension of his experience.

To-day in education we are able to reap the benefits derived from the development of printing, photography and the cinema, for commercial purposes. Much still remains to be done, and this may be summarised briefly as follows :—

1. There is the widest scope for research in the best way of presenting visual aids, for pupils of various ages and abilities for the teaching of various topics, and in combination with other methods. Visual methods do not provide the answer to all teaching problems.
2. There is need for more and better equipment in schools, and for the improvement of 'visual-aid' centres and libraries.
3. The extension of the work of the visual aids committee which will act as a co-ordinating body for the many and varied organisations which have interests in the matter throughout the country.

There must arise a more critical attitude to visual method, and it must be confessed that the most skilful manipulation of the projector, whatever its type, will not solve the problems of learning and teaching, unless it is a stimulus to thought and activity. An uncritical, passive attitude in the midst of an array of visual devices is as bad as the old curse of verbalism.

REFERENCES

The Illiterate Anglo-Saxon; and A Short History of Education, Adamson, J. W., Cambridge.
A Survey of the History of Education, Wodehouse, H., London.
Education Theories, Browning, O., London.
The Schools of Medieval England, Leach, A. F., London.
Essays on Educational Reformers, Quick, R. H., London.
Hard Times, Dickens, C., London.
Educational Opinion from the Renaissance, Laurie, S. S., Cambridge.
English Girlhood at School, Gardiner, D., London.
Art and Practice of Printing, Montagne, London.
Orbis Sensualium Pictus, Comenius, A.

Wood Engravings by Thomas Bewick, Rayner, J., London.
Children's Illustrated Books, Smith, J. A., London.
Wood Engraving, Beedham, R. J., London.
Of Making Many Books, Burlingame, R., London.
English Book Illustration, 1800–1900, James, P. (King Penguin), London.
Illustrators of Children's Books, 1744–1945. Mahony, Latimer and Folmsbee, Boston, U.S.A.
Visual Education and the New Teacher, Meredith, P., Exeter.
From Cave Painting to Comic Strip, Hogben, L., London.
Prints and Visual Communications, Ivins, Routledge, 1953.
Foundations of the Theory of Signs. Morris, Chicago.
The Language of Pictures. Bell, Batsford.
A Student's Guide to Wood Engraving. Gregson, Batsford.
Appreciation of Engravings and Etchings. Linssen, Jenkins.

Two Common Ground film strips with descriptive printed matter supply some excellent reproductions of original pictures relating to the development of visual methods of instruction from the earliest time : The Growth of Visual Education.

CHAPTER II

THE EYE AND THE MIND

'They should see with their eyes . . . and should understand.'
St. Matthew 13, 15.

ALTHOUGH it is important for the teacher, who wishes to make a thorough study of visual methods, to consider the psychology of seeing and of understanding what is seen, it is also desirable that he should know something of the physical mechanism of sight.[1] Formerly, following the 'transmission' theories of Helmholtz, the eye tended to be thought of as the final organ of visual perception. We now regard it as a link in a chain, the receptor organ at the beginning of a complex neural system. The eye, the other sense organs and the brain should grow up to work together; and the extension of our knowledge of psychology and neurology is offering a basis for the development of educational practice in the use of the senses. The following factors are worthy of the teacher's consideration :—

1. *Binocular vision.* Each of our eyes sees things from a slightly different viewpoint. With experience we are able to use this to interpret the three dimensional aspects of objects and to judge distances. Practice in doing the latter is an important training for the eyes and mind.[2] With experience, the normal eye tends to focus automatically on the object which is being looked at. A difficulty sometimes arises in badly-made visual illustrations, where a sense of strain and fatigue are caused by a continued effort to focus the eyes on an indefinite picture. A background to a picture should be chosen so that it sets off the

[1] The excellent Pelican book '*The Science of Seeing*', by Ida Mann and Antionette Pirie should be read in this connection.

[2] Examples will be found in Baden-Powell's 'Scouting for Boys'.

main objects in the picture without distracting the attention from them. A background which is intended to have some significance in itself should be in focus and tinted in lighter colours than the central object. The picture, whatever it represents, can only be at one distance at a time from the eye. It is futile therefore for the eye to try to refocus from foreground to background. This is a point which should be kept in mind by all who make pictures, whatever the type.

Photographs taken across valleys, expanses of water and along roads are apt to be disappointing. They lack a significant object on which to focus both eyes. (An interesting consideration which arises from our binocular vision is that a scene does not appear to be any brighter when it is looked at with two eyes than with one. This in itself should effectively dispose of the older theory that seeing was to be thought of in terms of the eyes only). The use of binocular vision to produce a sense of solidity and distance is found in the stereoscope, which is not sufficiently used in education, apart from remedial work.

2. *The peripheries of the field of vision* are more sensitive to light but give a less well-defined image than that in the centre. Thus photographs or projected pictures should tend to shade off towards the edges, though for special purposes high lights at the top are on rare occasions permitted. No picture should be so ill-conceived that the centres of interest are at the edges.

3. *The blind spot.* Quite near to the most sensitive spot in the retina it is pierced by the optic nerve and at this point it is quite insensitive. Thus, in the middle of the field of vision of each eye there is an area known as the ‘ blind spot ’. This has some importance in the use of the eye in driving an automobile or in playing such games as tennis or cricket, but it need not worry us when we are using both eyes to look at a picture.

4. *An astigmatic eye* is one which cannot keep in focus, at the same time, lines at an angle to one another (e.g. vertical and horizontal lines). It is a fairly common eye defect in children and should be corrected by the wearing of suitable spectacles. Children with astigmatism will tend to find some aspect of a picture exaggerated in their minds. The vertical lines, for instance, may be in focus and the horizontal characteristics out of focus. (For special purposes this quality has sometimes been imitated in lenses for producing special types of picture such as the interior view of a Gothic Cathedral where the impression of the upright pillars was purposely exaggerated). Astigmatism causes difficulties in reading where the characteristics of the letters, whereby they are recognised, are chiefly vertical, but the lines of words are horizontal. The inability of the astigmatic child to understand his difficulties has sometimes led to serious consequences in his attitude to printed matter, then to his school work in general, and finally has not been without its effect on his mental efficiency and stability. Astigmatic children are often at a disadvantage when they try to answer pictorial and other non-verbal intelligence tests. They also have difficulty with pictures and diagrams which contain much shading and cross-hatching.
5. *Long straight lines in perspective* often appear to the eyes as curves. The Greek architects knew of this and compensated for it in the construction of their buildings. A Gothic steeple with straight sides meeting in a point at the top would look as though it were concave. Accordingly, protuberances in the form of crockets were often used to prevent the eye from seeing a long straight stretch of stonework or, alternatively, a slight convex bulge was given to the steeple (entasis).
6. *The eye and the mind seek the completion of a figure*; they tend to make patterns from objects fortuitously placed

(see page 35). Such patterns may be distracting. For instance, poorly set lines of type will sometimes show a sequence of spacings in the successive lines of the page causing white ' rivers ' which run down the page or a portion of it. Thus the eye is taken away from the line which it was reading. Margins should be as generous as possible in relation to the number of words in each line. Margins which are too narrow allow the eye to wander from the page and refocus elsewhere.

7. *The young child's eye does not possess the acuity of vision*, even when this is limited to its physical aspects, that is commonly supposed. *Visual imagination in the child is usually much better developed than visual acuity.*

Reading matter intended for children has often been printed with type of too small a size; pictures which are not large enough, not definite enough, with lines which are too thin and sketchy are often given to children.

The examples given below show the minimum sizes :

This type may be used for books to be read by children under seven years.

This type may be used for books to be read by children from seven to eight years old.

This type is suitable in size for books to be read by children from eight to nine years old.

This type is suitable in size for books intended for readers over nine years old.

This type is suitable in size for books intended for practised readers over twelve years old.

Some research has been done in typography in relation to easy visibility. This book is printed in 11 point on 12 point body Imprint.

8. *Parallax.* The phenomenon of parallax, which can be used to give a real physical and not only subjective idea of distance, is one which does not depend on binocular vision for its effect. It does demand movement of the eye or viewpoint, however. The most familiar example is the appearance of near and distant objects from the window of a moving railway carriage. The distant objects appear to move with the eye and the nearer objects in an opposite direction past it. The phenomenon is used to give an idea of depth in scenes and models, by arranging flat surfaces with painted scenery or decorations parallel to one another and at different distances from the eye. A cinema-camera moving in a direction parallel to and facing an object, such as a large building, can also be made to give the effect of depth in the building if the sides or roof are visible. Some of Walt Disney's films make use of the principle by having scenery painted on parallel glass plates which are placed at different distances from the camera. The near plate which acts as a background to the principal object which is being photographed is made to move in a direction opposite to

that in which the object appears to move ; the distant glass surface painted with appropriate scenery is kept still or moves more slowly in the opposite direction. The nearer of two distant objects can be found by walking a distance at right angles to an imaginary line going through them. The nearer object will be that which appears to move in a direction opposite to that of the eye. Parallax is a phenomenon which is useful to the astronomer and surveyor but a knowledge of it is also helpful for giving the impression of depth and distance.

9. *Colour vision.* This has been dealt with separately in relation to colour in pigments and for illustrative purposes. (See page 227).

Some Psychological Considerations

' During the later stage of primary education the majority of pupils appear to be visualisers. They imagine things with the mind's eye. If the teacher could penetrate into the consciousness of such a child he would find the child's thoughts unrolling themselves before him rather like a cinematograph film. Within the teacher's mind the film is probably a talking film, and the film itself is less clear than the talk—the chief talker being the teacher himself, without troubling to call up concrete visible pictures. What is presented or suggested in the child of this age, then, should be presented or suggested in concrete, pictorial and visible form. Towards adolescence there seems no doubt that the power, or at any rate the habit of visualisation tends to diminish; and the more intelligent children tend to think in terms of words rather than in terms of concrete images.'

Sir Cyril Burt,
in *The Primary School.*

Professor Line[1] in his investigations on the growth of visual perception in children established that for effective learning:

1. The new material which is being presented to the child must satisfy a conscious need.
2. It must be meaningful to the child; it must be related to the child's own experience and be interesting to the child.
3. The material or concept should be suitable to the maturation level of the child who is learning.
4. It is desirable that some activity should grow from the presentation. Learning is an *active* process.

Before the age of two years most children are aware of 'colour form' and from four to six years they perceive form as an abstract sensory quality. At six there is normally absolute space discrimination and familiar objects can be picked out from a fairly complex picture. Between seven and nine years most children can give a general related description of a picture of common objects, and at the age of ten an average child should be able to appreciate a picture as a whole.

The inability to perceive the more subtle relationships between the parts of complex, perceptual stimuli probably accounts for the charge that children are liable to subjective and illusory perceptions, and, in fact, children of poor intelligence report details which do not exist.[2] At first the wholeness of the perception tends to avoid defects and details,[3] and there is a necessity of thorough understanding before the details become apparent in their relation to the whole. 'No experimental work is needed to inform us that the percept is clearer, more accurate and more detailed the greater, within limits, the intensity, size, clear definition, colour saturation and duration (time of exposure) of the stimulus object.'[4] Objects nearer the centre of the field are

[1] M. R. Line, 'The Growth of Visual Perception in Children,' *British Journal of Psychology Monograph Supplement*, Vol. XV.

[2] F. Smith, *British Journal of Psychology* (1914), 6.321.

[3] This is well known to amateur proof readers.

[4] M. D. Vernon, *Visual Perception*, 1937.

better perceived than those at the periphery. The optimum distance of a perceived figure from the eye varies to a certain extent with the nature of the figure and the physico-psychological characteristics of the observer. The length and breadth of the 'whole' figure should be about a half of its distance from the observer. A greater intensity of illumination is necessary for the perception of smaller figures than for greater.

When the mind has reacted in a particular way and given importance to a configuration the remainder of the visual field tends to fall into the background. The whole process of perception may be divided into the following stages.[1]

1. A constructional process.
2. An assimilative process in which a constructed whole is related to past experience.
3. A response tendency.

Much experimental work has been done on the perceptual relationship between a figure and its background.[2] The chief interest to us is that we can take measures to assist the child to separate the figure so that it shall acquire for him the significance for which we hope. The mind tends to give neutrality to a framework. Thus, as Koffka[3] has shown, a building on a lawn sloping towards the observer appears to tilt backwards; a white surface in red illumination appears to be less red than a red surface in a white illumination, and so on.

Vertical lines dominate over horizontal, a contoured field over a plain one and in the words of the Law of Prägnanz 'we have a natural innate tendency towards certain favoured simple forms.'

Children see a picture as a 'whole' and analyse it afterwards. Thus, every effort must be made, when a picture is produced as a visual aid, to help them to perceive its wholeness without

[1] J. Parsons, *Colour Vision and an Introduction to the Theory of Perception* A. W. Wolters, *Evidence of our Senses.*

[2] M. D. Vernon, *Visual Perception.*

[3] Koffka, *The Growth of the Mind.*

ambiguity and without distraction.[1] An outline should be bold and should be filled in with colour or shading. An incentive to interest should always be supplied. For instance, children of three or four years of age are usually able to give striking, accounts of the pictorial cover of a chocolate box, the contents of which are known to them.[2] Perception consists essentially of the emergence of the figure from the ground,[3] and after this the figure resists change but the background does not. Older and more intelligent children pay the least attention to the colour and form of a background. The tendency to make '*sense out of sensation*' is such that the mind tends to complete a partial form to such an extent that subjective certainty can often result from a poor and partial stimulus form.[4]

Psychologists have attempted to divide children and adults into groups according to their perceptual types. The student of visual methods may well keep these in mind and, while he recognises that the 'pigeon-holing' of human beings in this way is an over-simplification, it may help him to understand individual differences and difficulties. Further, it may suggest that he should tread warily before thinking that visual methods give a universal method of mass-education. The following types have been noted, but the majority of individuals will show some mixture of these characteristics :

1. The subjective type : imaginative and inaccurate.
2. The objective type : matter of fact and accurate.
3. The intelligent type, who combines the qualities of the above with ability to deduce hypotheses from his percepts.
4. The superficial type lacking both in imagination and accurate perception.[5]

In addition, some individuals are more occupied with shape

[1] J. E. Segers, *J. de Psychol.* (1926) 23.608 and 723, calls this tendency to 'wholeness' *syncretism.*
[2] Munn and Stiening, *J. Genet Psychol.* (1931) 39.73.
[3] Ruben. *Visuell wahrgenommen Figuren,* Kobenhaven 1921.
[4] M. B. Drury, *Am. J. Psychol.* (1933), 45.628.
[5] Piaget and Rossello, *P. Arch. de Psychol.* (1923), 18.208.

and form (draughtsmanship and architecture) and others with colours (colour masses and harmonies). These tendencies can be detected in the works of creative artists, but they also occur in those who perceive but do not create externally.

Again, there are synaesthetic types who, in an extremely subjective manner, combine sensory impressions and describe a visual sensation in terms of another sense (e.g. ' loud ' colour, a ' tight ' handling of a picture) or an aural sensation in terms of sight or touch (e.g. ' purple harmonies ', ' a blaze of orchestral colour ', ' a hard tone '). No doubt the synaesthetic enjoy or suffer a heightened appreciation of a particular stimulus, but common as is this tendency, it is yet not universal.[1] Perception is influenced by various attitudinal factors, and in particular some adults tend to synthesise and perceive the field as a whole and others are analytic in their attitude.[2] In producing pictorial material for children the ' wholeness ' of the meaning of each picture should never be in doubt and restless details or filigree decoration should be kept out, so that those of analytic attitude shall not be diverted from attention to the main theme. Various orectic types react to diagrams, pictures, abstract or apparently meaningless shapes in different ways.[3]

It is beyond the scope of this book for us to discuss in detail the psychological nature of colour perception. The complex relationships between the surface colour, brightness and size of figures, and the hue and intensity of the incident light have been extensively studied by Katz who terms the essential brightness relationship of a surface (determining its apparent distance from the observer) its insistence, or the forcefulness with which it bores its way into the consciousness.[4]

[1] M. D. Vernon, *Visual Perception*, Cambridge, 1937.

[2] E. R. Jaensch, *Eidetic Imagery*, London, 1937.

[3] A number of personality tests have been devised by using this method. The best known is the Rorschach Ink Blot test. See Mons, *The Rorschach Test*, London, 1947.

[4] D. Katz, *The World of Colour*, London, 1935. See also the short section on Colour, page 227.

Bright colours, with suitable harmonies, are necessary for good perception. A riot of colour, in spite of any immediate orectic effect which it may have, hinders understanding. A colour scheme should always be homogeneous; and the skilful use of shades of one or two colours, with a careful management of the size and colour of the background will produce effective material for teaching purposes.

Children and adults who have not learnt to develop their colour sense prefer simple complementary colours, and the more complex relationships of subtle colour harmonies are appreciated by those educated in colour matters.

There is still much room for research on all these matters but it will be obvious to all that they have great importance in the production of materials for visual methods in education. Further accounts of researches on the psychology of vision are mentioned in the bibliography.

An interest in good drawing has not infrequently led to a study of architecture, which in turn was enriched by its association with other branches of art and with history. Engineers and scientists have sometimes said that they first became interested in their subjects by the contemplation of the austere beauty of the functional form of a machine or a piece of apparatus.

The problem of the psychological reactions of various individuals to shapes, diagrams and models, is an interesting one, and it is still the subject of much discussion and research. Many of these reactions are not easily investigated because of their subjectivity: they can be felt rather than described. A few principles which should be kept in mind in all work in visual education, and which may suggest further lines of research may be mentioned.

Hambridge[1] has shown that simple ratios between lengths, breadths, heights and other dimensions constantly occur in

[1] M. D. Vernon, *Visual Perception*, 1937 and C. W. Valentine, *The Experimental Psychology of Beauty*.

classical architecture and are almost invariably pleasing to the eye. The skilful use of the straight edge and compass, to give simple numerical relationships between various linear dimensions, was seen at its best in the historic Gothic style; and the failure to appreciate these principles led to the perversions of the 19th century ' neo-Gothic '. To most people the most pleasing division of a line is the ' golden section ' in which the smaller part bears the same relation to the larger as this does to the whole line.

The most valued principle in appreciating shapes and colours is *empathy*, a psychological idea first developed by Lipps, which is probably of primitive origin as a mental function. It takes the form of an active tendency to project oneself into a percept and re-experience what is seen there.[1] ' By empathy we react to the brightness or sombreness of a colour, tense ourselves to the massive strength of a stone column supporting an entablature, soar with the sweeping, aspiring lines of a Gothic cathedral or dance with the light, leaping notes of allegretto music.'[2] In looking at architecture, animal or human form, we find attractive the shape which gives us the best sense of balanced effort. A heavy mass supported by a slender pillar gives a sense of strain and danger, and a small body supported by a pillar of great girth produces a feeling of futility. In the same way, the ' eye ' is very sensitive to a lack of symmetry, and an ill-balanced mass gives a feeling of strain. A histogram,[3] to be effective, should be constructed with vertical

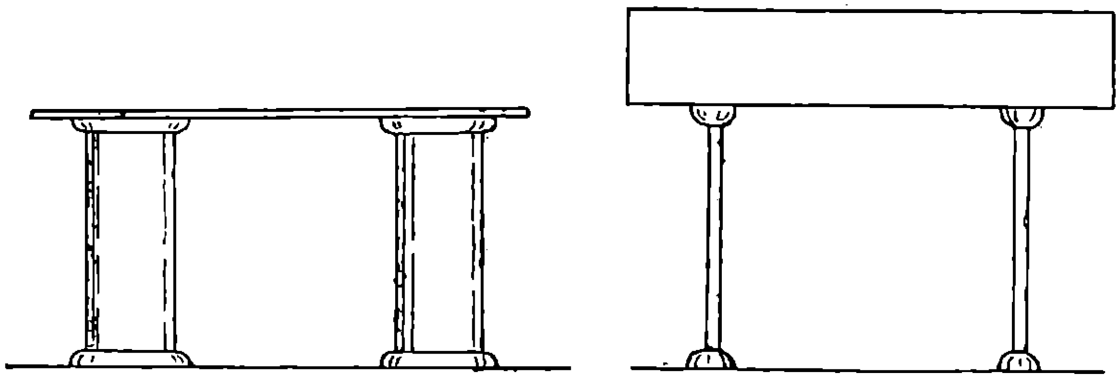

FIG. 3

[1] T. Lipps, *Aesthetische Factoren der Raumanschauung* in *Beiträge, Festgruss zu Helmholtz*, 1891.

[2] R. B. Cattell, *General Psychology*. [3] See page 53.

columns. It should be filled in with a colour darker than its surroundings. Here the phenomenon of empathy is the explanation. Powerful machines, large masses such as mountains, waterfalls, skyscrapers, tend to create an aesthetic excitement which is probably empathic, for example, ' I will lift up mine eyes unto the hills from whence cometh my help '.[1] We are filled with awe and for a moment try to catch the ' feeling ' of so great a size, or so much power.

The activity of the mind in making ' sense of sensation ' was formerly called apperception. All readers will be familiar with optical illusions where the mind, through experience in certain ways, reads more into the crude sensory pattern than is actually there. Illusions are difficult to avoid in visual illustrations and many have a positive value in art. For instance, the use of purple shadows in a painting will enhance the warm sunlit appearance of an object which is casting the shadow. ' I will paint a Venus by using mud ', said Ingres, the French painter, 'if you will permit me to choose my background '. The use of perspective produces an illusion which gives an idea of size, solidity and viewpoint if it is properly used. The meaning and artifices of perspective should not only be taught to young artists but to everybody. The necessity of representing three dimensions in terms of two is fundamental both to drawing and to photography. It is essential that the first principle of the devices employed should be understood. A sense of perspective is not born in children. In fact, many infants find the apparent magnification in the size of a bus or a train as it approaches an alarming phenomenon,[2] on the first few occasions of their experience of it.

Children and even older people tend to draw what they

[1] Psalm 121.

[2] Although perspective at first sight would appear to be determined by simple geometrical principles, Thouless has shown that there is a subjective aspect of it. The apparent angle formed by the two edges of the road as it recedes to the horizon varies with the state of the mind of the individual looking at it, his degree of fatigue, etc. (Proceedings of British Association for Advancement of Science, 1938).

believe they know, rather than what they see. A tree trunk is brown and therefore they use burnt sienna (if unfortunately it has been supplied to them); flesh is yellow, pink or white; the sea is blue; no picture of a man is complete without a view of all his limbs and so on.[1] A realisation of the difference between sensory perception and apperception is necessary for the teacher, and at each stage the child should be taught the language of the picture, its relation to objects and its relation to what the child may think about it. (Complex relationships between objective and subjective phenomena are not peculiar to visual matters. The principle applies to all the senses. It was formerly thought that the aural feelings of pitch, loudness and tone quality bore a simple correspondence with the physical qualities of frequency, amplitude and wave-form respectively. It is now known that each of the first three may be related to all of the three physical characteristics). Moreover, one sense may tend to cause illusions related to another. For instance, a small block of lead always appears to be heavier than a large empty cardboard box of the same weight.

The dynamic qualities of art are important. A picture must live even though it deals only with ' still life '. In the drawings of children movement and vitality are apparent, and such qualities are not infrequently absent from the work of more mature

[1] ' Young children, when they draw and paint what they see or have imagined, use signs and symbols of their own—early forms of expression akin to the idiom of primitive peoples. Understanding teachers recognise these signs and symbols as a primitive language, not always intelligible to grown-up people and respect the sincerity with which a child, having explored his surroundings, gives form to his impressions. The teacher's role is to see that the opportunities and materials are provided which make this early experience possible, and to show sympathy with what the children want to do.

' Throughout the three stages of primary education the teacher should know clearly what she wants their art education to do for the children and plan their art activities accordingly. Art education should train and develop their general artistic sensitivity, and should enable them as they progress, through experience, practice and teaching, to acquire increasing control over tools and materials. It should stimulate their creative interest, both imaginative and practical—and help them to gain poise and self-control.'

Art Education, Ministry of Education Pamphlet, No. 6, H.M.S.O.

'artists' in spite of their powers as draughtsmen and painters. A satisfactory picture must not only convey from its flat surface the idea of three dimensions but often it is required to add a fourth, strange though it may seem—that of time. Only then does it become vital. At first sight it may seem paradoxical that space should be mixed up with time. The infant learning his way about by exploring, judges distance by the time he takes to cover it.

We must not over-estimate what is actually contributed by the eye as a sense organ. Experience and intelligence combine to fill in or even to complete the outline and supply the meaning. For instance, this figure might mean two parallelograms with a common side on a plane surface to a student who has been labouring with the properties of plane figures. To others it might suggest an open book or double sheet of notepaper with its edge near to, or again away from the observer.

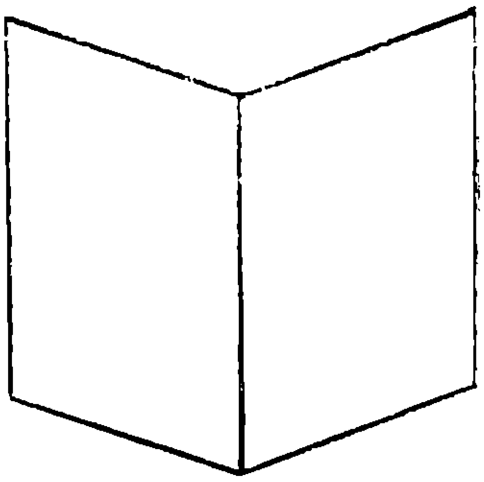

Fig. 4

The great artist will often produce much out of little. A few significant strokes of the brush, the skilful use of a few lines, the artistic development of a simple theme in architecture as in music, give a sense of a large effect with a simple effort. Herbert Spencer thought this was fundamental to all art. In the same way, rhythm and the repetition of a theme with slight variations produce a feeling of unity in diversity and of vitality which should be found in all art works. The Norman arcade at Durham Cathedral is an interesting example of a theme (the Norman column and arch) developed in rhythmic pattern, with variations in the treatment of the stone pillars.

The Gestalt (configuration) psychologists have extended the conception of 'wholeness' to such a degree that they believe the parts cannot have their real significance without the whole. Our minds cannot tolerate a chaos of sensations and are always at work trying to organise and find the meaning of sense data. There

are inborn ' hormic ' dispositions to perceive things as wholes, and probably also there is a tendency to perceive *as a whole* sensations that occur together, that have an outline or that repeat themselves. Out of these groupings, analysis and synthesis may go on according to new needs and experiences. At a later stage the relation between different ' wholes ' may be perceived. Visual aids, as we shall see, should assist this process of analysis and synthesis which is so important a part of learning. Spearman enunciated three ' neogenetic ' principles of learning—(*a*) perception, (*b*) the eduction of relations, (*c*) the eduction of correlates.[1] A picture is perceived, the various parts of it are seen and related together and to the experience of the person looking at it, and finally it is used to extend, compare and correlate with other experiences, whether of a visual or other nature.

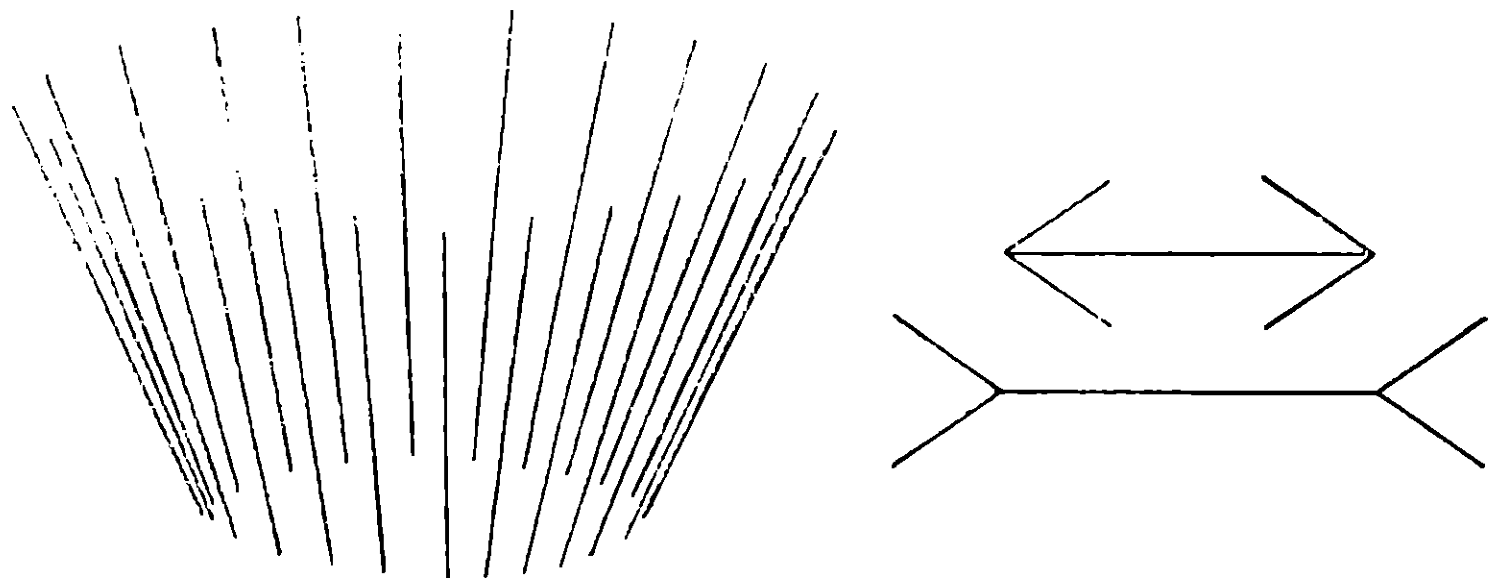

FIG. 5

One of the horizontal lines looks longer than the other because the mind does not perceive it apart from the figure which contains it. In the first figure the mind perceives a three-dimensional scheme although it is produced by straight lines on a two-dimensional surface.

The mind tends to perceive a picture as a whole. Thus it will complete three lines and make a triangle; it will turn a series of lines like these into the ribs of a round basket. The illusions given above are examples of the inability of the mind to analyse out the line from the whole figure.

[1] C. Spearman, *The Nature of Intelligence and the Principles of Cognition* London, 1923.

Again, light objects appear to be larger than darker ones. We usually over-estimate vertical distances and under-estimate horizontal distances, because we more often make horizontal movements of our eyes than vertical ones.

The study of such illusions has a practical application in helping us to see the necessity of using various devices for making various lines stand out from figures of which they form an integral part, when this is necessary. Coloured chalks, cardboard models, light, jointed structures of wood, cardboard or paper strips, and superimposed drawings on glass, cellophane or other transparent material will help. The moving picture can introduce a line into a diagram, build it up *in situ* or take it away at will. Film strip can be employed to show the gradual synthesis or analysis of a complex diagram, either in black and white or in colour, by using a number of frames with diagrams which differ but little from one another.

Visual methods offer such a compressed form of treatment that much ground can be covered in a short time. This is a danger which must be anticipated and at no time must the child be taught more than he can think about, in spite of the temptations afforded by colourful visual method.

Dale[1] arranges visual experiences in the following order of directness and intensity, starting with the most difficult and remote from contact with real life.

1. Verbal symbols (words in print).
2. Visual symbols (diagrams, Isotype, picture language).
3. Still pictures.
4. Motion pictures.
5. Exhibits.
6. Field trips.
7. Demonstrations.
8. Dramatic participation.
9. Contrived experiences. (' Mock-ups ' and ' fakes ').
10. Direct purposeful experiences.

[1] E. B. Dale, Audio-Visual Methods in Education.

The new education is child-centred and should be based on the spiritual, mental and physical needs of the child revealed to us by patient experiments in child psychology and physiology. Learning demands activity, and visual methods should lead to class projects, discussion, written exercises or model-making. With a larger aim in view than that of the learning of the immediate topic in hand, the material must have significance as a part of a larger educational whole. What is done now should arise from previous work and should lead onwards easily and naturally.

If all visual aids to teaching were conceived with the factors which we have mentioned in this chapter in view, the work would be useful and vital. Here should be the very ' growing-points ' of mental life. The combining of new experiences with pre-percepts (which are often modified in the process), should produce not just an addition of new facts, like the sound engraving on a wax disc, but rather a new richness and a response of the whole mind to the new experience, which in itself should be fertile enough to open the way to more.

If visual aids are used with little wisdom and discretion, superficiality in teaching and learning may result. The teacher who is seeking to know the real value of a teaching tool for his particular purpose should remember that *visual aids are not a ' subject ', but are a means rather than an end.* We summarise below the substance of some general criticisms which have been made recently against certain aspects of visual methods of teaching and propaganda.

1. The child tends to be passive, and often no attempt is made to use the visual method to lead to purposive activity. Nor is the value of the visual method compared sufficiently often with that of older teaching procedures by planned research.
2. The convenience of the visual (projection) method tends to the use of groups which are too large for effective teaching.

3. Visual methods are ' too easy ' and will lead to the atrophy of real teaching.
4. These secondary experiences are often given from the point of view of the adult artistic eye. As such they need much interpretation.
5. The production of visual material by mass methods is alien to the individuality of the child and irrelevant to the needs of society.

These criticisms should not be lightly dismissed, but we should endeavour to use visual methods so that they cannot be attacked in this manner.

BIBLIOGRAPHY

The Science of Seeing, Mann and Pirie, Pelican.

The Psychology of Seeing, Brandt, Philosophical Lib. (New York).

The Evidence of our Senses, Wolters, Methuen.

The Sensory Basis and Structure of Knowledge, Watt, Methuen.

The Language and Mental Development of Children, Watts, Harrap.

The Growth of the Mind, Koffka, Kegan Paul.

Principles of Gestalt Psychology, Koffka, Kegan Paul.

Visual Perception, Vernon, Cambridge U.P.

Further Studies in Visual Perception, Vernon, Kegan Paul.

The Physical Background of Perception, Adrian, Oxford.

Research in Visual Perception, Leonard (Visual Education, Nov. 1952, to Jan. 1953).

Visual Presentation of Factual Data, Vernon, British Journal of Education Psychology, Vol. XX, Pt. III.

Colour Vision and an Introduction to the Theory of Perception, Parsons, Methuen.

Eidetic Imagery, Jaensch, Kegan Paul.

The Dimensions of Personality, Eysenck, Murray.

The World of Colour, Katz, Kegan Paul.

The Experimental Psychology of Beauty, Valentine, Jack.

Art Education, Ministry of Education Pamphlet, No. 6, H.M.S.O.

The Primary School, Board of Education, H.M.S.O.

Audio-Visual Methods in Education, Dale, Harrap.

CHAPTER III

VISUAL TOOLS FOR TEACHING AND LEARNING

' The more ingenious our instruments, the more dull and incapable our organs ; by collecting machines about us we lose those that are within us.' *Rousseau.*

THE chief visual tools which can be used by the teacher may be classified as follows :

Pictorial and Graphic Aids.
- Blackboard
- Textbook illustrations
- Charts
- Pictures (*a*) Drawings
  - (*b*) Reproductions
  - (*c*) Photographic
- Maps of various types
- Diagrams. Picture language (Isotype, etc.)

Optical Aids.
- Episcope
- Diascopes (*a*) Standard Lantern
  - (*b*) Sub-standard Slide Projector
  - (*c*) Strip Projector
  - (*d*) Microslide Projector

16 *mm. Cinematograph.*
- (*a*) Silent
- (*b*) Sound

Specimens.
- (*a*) Actual Objects
- (*b*) Facsimiles or Reproductions

Models.

(*a*) Reduced
(*b*) Enlarged
(*c*) Sectional
(*d*) Working, included real objects, e.g. engines

School Visits.

The direct experience
The contrived experience, or ' mock-up '.

In this chapter we shall deal with those which do not require optical projection.

THE BLACKBOARD

The blackboard still remains the most useful visual aid to teaching in schools. As such it is surprising that comparatively little trouble is taken to provide and maintain adequate blackboard surfaces and to use the board effectively. Although we do not wish to make a case for excessively slow ' copyplate ' writing on the blackboard it still remains a fact that few children will seek, in their own work, to rise above a standard which a teacher has set on the blackboard.

When it is used properly the blackboard becomes a useful focus of attention. Most young teachers soon realise that after a period of exposition in which they have hardly succeeded in holding the attention of the class, a quick blackboard illustration will go far to restore this. Nothing is more unsatisfactory in class-teaching than a lengthy and laboured drawing or writing on the blackboard with the teacher talking to the blackboard, and his back to the class. The blackboard, used as occasion demands throughout a lesson, enables children to see what they have heard. They can connect the aural and the visual sensations and this is a great help in learning. An examiner reading the scripts of a whole class of children and finding certain words constantly misspelt in different ways suspects that the blackboard work in the lessons on that subject, and the children's reading to support each lesson,

have been inadequate. The children have written their own impressions of a word heard aurally and not seen. Their repetition of the word in its wrong form is an even more vicious form of verbalism than that which we have already noted. The blackboard is a great help to the teacher who is not gifted enough to translate his ideas into simple teaching phrases. By using a combination of words and diagrams on the blackboard as a start he may then feel able to express himself in precise form and in a suitable language, whether of words, diagrams or graphs. 'Talk and Chalk' done well, with suitable questions and subsequent creative or activity work by the class is still a most important method of teaching, and as such it will not be displaced altogether by more elaborate visual and other methods.

A blackboard summary should play an important part in lesson giving. It is necessary to mention that a lesson is occasionally reduced to little more than the 'dry bones' of its blackboard summary and a feeling of aridity is thus produced. Nevertheless, the blackboard summary is a most useful aspect of the work, particularly of young teachers. It is a summary of the lesson content and usually it will contain no more than five or six key-sentences which lead naturally from one to the next. Such a summary will help the teacher to prepare an adequate but not excessive quantity of material for the lesson and will give him the necessary sense of development within a unity. It will help him not to lose sight of the salient features of his lesson when he is questioning the class and using visual and other illustrations or practical demonstrations. The blackboard summary can be built up as the lesson proceeds, or it may be obtained from the class by questioning in a short revision period at the end of the lesson. It can be copied into the pupils' notebooks and will then serve as a bridge to the next lesson.

Even when the blackboard is used just for the quick writing of occasional words or the rapid delineation of an illustration, the work should be as neat as possible and it should be arranged

so that the sequence of illustrations follows the order of the lesson. The writing should proceed from near the top left hand corner across the board and then continue on a lower line starting from the left. Blackboard writing should be easily readable from the back of the class. A single blackboard held by an easel is not usually adequate and although it may serve for the teaching of certain arts subjects it will be quite inadequate for mathematics and science. Blackboards should have their surfaces renewed more often than is the case at present. A dead black, indigo or dark slate-grey surface which can be cleaned, does not easily wear, will not pit, and will not 'shine', can only be obtained by using rather expensive blackboard paint. Slate surfaces are more permanent but after frequent use they become so light in colour that they give insufficient contrast with the chalks used. Moreover, they are not readily portable and can be broken. New plastic surfaces for blackboards have been developed and can be obtained in black, dark grey, dark indigo and dark green. The green 'blackboard' is said to offer a pleasing relief to the eyes, but if a blackboard is really black, sufficient relief can be obtained by using different coloured chalks. The use of yellow makes a pleasant change from white for ordinary monochromatic blackboard work. The objection to boards of green or blue colour is that, if coloured chalks are to be used, the values of their hues and tints will be modified. If the blackboard is fixed at the front of the room in a vertical frame it may be illuminated by lamps which are arranged so as to concentrate their light on its surface.[1] Good white chalk, in any reasonable natural or artificial light, has such excellent reflecting powers that it will stand out from a dark background in a remarkable manner.

Beginners find two principal difficulties in the use of the

[1] Experiments have been tried in which illuminants with strong ultra-violet radiation were used for this purpose and the chalk was prepared with sulphides and other fluorescent materials. There seems to be little practical value in this for classroom purposes, and there is the possibility of strain to the teacher's eyes.

blackboard : firstly, writing with chalk, and secondly, perspective, proportion and the maintaining of horizontal and vertical lines. The stick of chalk should be held as far from the writing-point as is possible. The line should be drawn by gently pressing the end of the chalk on the board surface and then letting the chalk make its mark by moving it with it drawing-point following the movement of the hand, and with the chalk at an angle of about 45 deg. to the surface of the board. There should be complete freedom of the wrist in doing this. The chalk point should not be forced forward into the blackboard. The chalk will flatten at the writing end leaving an oblique ellipse on its surface. A slight turn, either from the wrist or between finger and thumb, will enable a thin line to be produced by using the edge of the ellipse, or a thick line by using its flat surface. In drawing, sticks of chalk of full length should be used if possible, and there should be freedom of fingers, wrist and elbow. Practice should be obtained in making good sweeps using the whole arm. This will eventually lead to freedom and easiness of movement. By varying the pressure of the chalk on the board surface thick lines of extreme whiteness can be achieved at one end of the scale and thin grey lines which can be used for shading, at the other.

The student who has difficulties in preserving size and perspective, and keeping to horizontal and vertical lines should use a large blackboard T-square to start with, and make frequent inspections of his work from the back of the classroom when he is practising. Diagrams can be transferred to a blackboard by projection from a lantern or film-strip projector if the surface is generally somewhat lightened by chalk dust. The lines of the diagram are then gone over with chalk. Some teachers draw diagrams, straight lines, circles, etc., on the blackboard with soft lead pencils and then chalk over these rapidly during the lesson. The pencil marks made on the blackboard before the lesson cannot be seen by the class until the chalk is superimposed. *The clue to all blackboard work is boldness with simplicity.* The blackboard

should not be overloaded with much fine writing. Beginners usually find that their blackboard printing is more legible than their blackboard writing. This is a strain both to the eyes and the patience of the pupil. Blackboards ruled with sets of leger lines for music-teaching, and with inch squares, with thicker or different coloured lines to mark the 5's and the 10's, are useful in mathematics teaching, but the surfaces need frequent renewing if the lines are not inlaid and have only been painted on the black surface.

Coloured chalks are not used as much as they deserve to be. For diagrammatic work in science, for sketch maps in geography and for colour symbols in history and other subjects they are invaluable. Poor quality colour chalks, which were faulty both in texture and tint, have prevented the wider use of this simple technique in the past. Hard, gritty chalks are unpleasant, whether white or coloured, and should not be bought for any purpose, and more attention should be paid to the colour values. Some red or blue chalks give soft colours which look perfectly satisfactory to the teacher but which are hardly visible at the back of the class, so poor is the luminosity of these colours. Blue, in particular, fares badly in artificial light. The Ostwald colours, which give cheerful luminous hues, are very useful for blackboard diagrams, because each colour, in normal lighting conditions, produces the same psychological intensity. Thus, the colours can all be seen at the same visual level of sensation.[1] Some makers of chalks, knowing that the darker colours are not very visible at the back of the class, have diluted their colours to very insipid tints, and the resultant effect is the general timidity of degraded white. This is no way out of the difficulty. Whatever are the opinions of art teachers concerning the value of the Ostwald system for teaching colour, its value in blackboard colour diagram and map work is undeniable. It is quite remarkable, for instance, how a complicated geometrical diagram is simplified by the use of a few colours.

[1] See the section on colour in the appendix.

Colour is used in engineering, science and business in the form of ' colour keys ', i.e. as a means of identification, or ' pigeon holing ' A great deal more could be done on the classroom blackboard with colour.

PICTURES

We have already enunciated the principles which should determine the nature of pictorial material which is used for educational purposes. Each picture should have a simple and direct message to convey, and no pictorial or artistic devices should be used which could possibly obscure this. The centre of the picture should be the centre of interest, and the background should serve the purpose of setting off and heightening the interest of the picture itself.

Pictures should be large enough to ensure that everyone can see. They should be arranged at the same level so that they tell a story by their sequence; they should be well illuminated and should be changed frequently. Smaller pictures should be shown in the episcope. Poor reproduction with coarse-grained half-tone blocks should be avoided. Pictures should be properly mounted and stored.

A picture should recall reality. In addition to its subject value, it should be pleasing to the eye and attractive. Its methods should be as simple and direct as possible; the art of the camera, the painter and the draughtsman should be used to extend the child's experience and not to parade a novel use of a medium in an attempt to be original.

McKown and Roberts in *Audio-Visual Aids to Instruction.*[1] give a list of criteria which teachers might apply for the appraisal of photographic and other pictorial material for use in schools. It is a mistake to use too many pictures at a time. They should be used so that they represent a logical unit and they should be mounted in correct order. Good backgrounds of grey, black or grey-blue paper are necessary. The photographs should be

[1] McGraw Hill, 1940.

properly mounted and should not be mutilated or damaged, and when not in use they should be carefully filed and stored. The picture sets issued by the Central Office of Information are a model for type and size for mural exhibition. For class-room use in direct lesson illustration they would prove to be too small and the episcope should be used.

Is the picture—

1. Purposeful ? Relevant ? Significant ? Does it show clearly the points desired ? Will it really aid ? Specifically, just how ?
2. Truthful ? Accurate ? Authentic ? Up to date ? Complete?
3. Easily understood ? Simple in composition ? Proper in emphasis ?
4. Stimulating ? Interesting ? Will the pupils study it seriously ?
5. Suggestive of reality ? Action ? Contrast ? Comparison ? Continuity ?
6. Appropriate to age and class levels of pupils ?
7. Artistic in elements, composition, lines, colour and finish ?
8. A good print ? Clean and distinct ? Free from blemishes and dirt ?
9. Of practical size ? Large enough to show details, and small enough to be easily handled and used ?

Too many pictures should not be used to illustrate a single topic, and, if possible, each picture in a series should bear an easily perceived relationship to its neighbours. Still pictures enlarged from film-frames or taken separately can be used to emphasise important points in a cinema lesson. If the pictures continue to be exhibited for some days after the showing of the film they will help to keep it in the children's minds. The pictures should represent certain important points in the film and should have a definite significance in themselves.

Coloured pictures should be rejected if they have been poorly printed with bad registration of the colours. Simplicity and

directness should be the keynote. A great deal may be learnt by the study of the best railway posters, where, in spite of some exaggeration, the impression remaining in the mind is pleasing and definite.

Pictures should be mounted on stout cover paper or on thin card which should be dark green, grey, brown or black; (usually white is not a suitable colour for the mounting of photographs). Such mounts give the print rigidity, prevent damage to its edge and facilitate filing and storing. Paste is put on the back of the picture which is then laid on the mount and smoothed by the fingers with a clean piece of cloth. After this a clean sheet of paper is laid on the print and it is pressed firmly in a press or between boards with weights to press one board on the other. Eyelets in the top edge of the mount will obviate damage due to the frequent use of drawing-pins for fixing the pictures. Each picture should be titled and details concerning its date and origin should be written on the back. If eyelet holes are not fitted, the picture can be shown by trapping it between four drawing pins and it is then not necessary to make holes in the mount.

(Maps should be mounted on linen or muslin. This may seem to be an elaborate and expensive business but, if they are to be folded or hung frequently, they will last much longer than if the paper mounting were depended on).

Book Illustrations

The improvements in photography, colour reproduction, the moving picture and the talking film have provided for the teacher media which have not yet been fully pressed into his service. The commercial development has given such excellent results that the same high technical standards should be insisted upon for educational work. Films which will not bear comparison with those which are provided at the local cinema in technical quality

[1] See the excellent black and white illustrations and maps in *Man the World Over*, by Brentnall and Carter (Blackwell).

are bound to evoke unpleasant reactions when they are used for educational purposes. Maps, with poor registration of garish colours, are not pleasant to look at, are difficult to read and will not attract children to show spontaneous interest. In the same way, book illustrations with poor colour work, such as is found in some fairly expensive books on Nature study, are bad. Too much colour printing in this country is not suitable for educational work and falls considerably below the finest standards of the early part of the century. The half-tone block is also capable of abuse. A number of recent textbooks have been illustrated with half-tone reproductions of other half-tone pictures. The effect of these is almost always unpleasant. Half-tone blocks should be prepared with a grain which is matched to the surface of the paper. Publishers often continue to use blocks when they are worn out and should be discarded. Again, many textbook illustrations are too small and are not helpful to an understanding of the text.

In childrens' books, intended to have educational value, the pictures should relate to the child's experience and not baffle him with displays of the artist's idiosyncrasies and attempts to affect original styles. New viewpoints and camera angles, which are not really required by the subject of the picture, only serve to confuse the child. Elaboration which is not represented in the text should be avoided. Pictures should not overwhelm the child-mind by their superabundance of detail. The learning process will only take place if something is left to the imagination of the child, so that he is able to get the best out of the text. It is good to ask the child to criticise the picture with reference to a text which has been carefully studied. In many subjects it should be possible to have pictures which integrate with the text to make a continuous whole. Often, the picture only serves to underline certain features of the book in a discontinuous way.

The Diagram

There should be a distinction in the mind of the reader between the use of visual aids as a part of a lesson and visual educa-

tion, which is a larger matter. Visual education will include the whole of visual experience in its relation to other experiences and to the whole process of learning, thought and feeling, that is, in relation to cognitive and orectic activities.

Training is necessary in looking at form, size and colour and the selection of what is important and significant. This is not done by the teacher directly pointing to the picture and telling the children what to look for, but rather by questions from the teacher and by the experience and imagination of the child. In learning a language we use it simply and in easy situations from the start, and evolve the grammar as we go along. Something similar is true of our learning the languages of pictures and diagrams. Finally, we should feel and desire with the mind which evolved the picture, and we should know and understand with the mind which evolved the diagram. A picture may demand powers of synthesis, and if it is a work of art it will demand feeling, insight, sympathy and understanding. The individual, looking at it in the right way, will feel that he is enriched by it, and has obtained a fuller understanding of an orectic phenomenon through its mediumship. With a diagram certain powers of analysis are called for, and a simple language has to be learnt. A diagram is usually much simpler than a picture as regards its pictorial content; but unless the language is known and used as the vehicle for simple analysis, the diagram may fail in its purpose. In recent years, particularly in the applied sciences, formalised diagrammatic symbolism has grown up and it must be known and recognised before any interpretations are possible. In view of this multiplication of types of symbols it is all the more necessary that agreed consistent forms should be decided upon. Together with the need for the mastery of diagram-language is the necessity of learning to pass, in the imagination, from three dimensions to two, and from enlargements to contractions in size and vice versa.[1]

[1] Size changes are confusing to young children and backward peoples.

Even the orientation of diagrams is a matter of some difficulty, and just as the direction of the North is plainly marked on most maps, so it is sometimes necessary to show top and bottom on a diagram.[1] When diagrams are used they should be referred back to the actual object which they represent, or to various pictures of it. Diagrams were used in vast numbers during the last war, and a training in the technical devices both of war and peace demands their use. When ideas are developed by the use of diagrams the result should be interpreted in terms of actuality if possible. Thus, diagrams are like arithmetical or algebraical processes which, for the sake of convenience, use symbols and operators abstracted from actuality, and which lead to a result which requires intelligent interpretation.

There are many types of diagrams and we have no need to mention them all here. There is no real line of demarcation in the gradual passage from a pictorial diagram to a schematic or symbolised diagram; but each stage represents further degrees of abstraction, analysis and the use of generalised symbols.

Diagrams may be given as :—

(*a*) Plan and elevation. Simple maps or sketches. They may be drawn to scale, or, in such cases as those which show the electrical or water system of a house, with certain features exaggerated in size or in colour to emphasise important points.

(*b*) The ' cut-away ' diagram, which aims to show on one plate certain external and internal features at the same time. Such diagrams are useful where there is a degree of continuity of both inside and outside features. Such diagrams

especially in the case of magnification. A film on the control of malaria was shown to a group of African natives. This film contained an enlarged ' close-up ' of an anopheline mosquito. The reaction of one native was ' Our " mossies " are bad enough; I don't want to go to England where they are bigger than man.'

[1] A Senior Army Officer informed the writer that certain pictorial material designed to be as simple and direct as possible, used for propaganda purposes amongst natives in India, was often looked at upside down.

are useful for showing certain aspects of mechanism, of buildings and of anatomy. Sometimes the cut-away diagram is replaced by superimposed diagrams showing features at certain levels. Such diagrams are used in showing anatomical details, external and internal sections of mechanism, etc.

(*c*) The cross-section. Such a diagram should give an imaginary picture of a plane surface given by a cut made through an object. Usually the section is a horizontal or a vertical one. It is sometimes necessary to demonstrate the principles of such diagrams by the use of plasticine models, cut with long knives or with cheese wire. It is necessary to know the orientation of a section made vertically and the height of one made horizontally. Anatomists, engineers, geographers and architects find cross-sectional diagrams to be very useful, but they need interpretation by careful thinking of the position and sense of the plane in which the section is made, and it is sometimes helpful to imagine a long, thin knife or wire making the cut.

Orthographic Diagrams

The diagrams aim at giving an idealised perspective view, that is, they try to show something of plan and elevation or of two sides by using a suitable viewpoint to give ' a three quarter ' view. There are strict rules concerning orthographic projection which aims to show both front and side elevations thereby introducing the representation of a third dimension on a flat surface. Sometimes the various parts of a piece of mechanism are shown separately, but in such relation to one another that the manner in which they fit to make a complete whole can readily be seen. This is known as an '*exploded orthographic* ' diagram or picture. An example showing the optical arrangements in a film projector is given on Plate IV.[1] Such diagrams are invaluable for showing the principles of construction of a complex object such as an engine or piece of machinery.

[1] Opp. page 129.

Schematic Diagrams

Often it is necessary to show the relationship of a number of things to one another. Examples are genealogical tables of human beings, animals and plants, classifications such as those employed in biology and in chemistry (the periodic system, etc.), flow-sheets showing industrial processes step by step, political systems, local government structures, hierarchies of a complex nature, the inter-relation of parts of a working system, e.g. a community, a living body, an organisation of people for a particular purpose. Such diagrams may be further abstracted and then they need a further use of symbolism. The relations of one symbol to another may be shown by lines, arrows and operators (e.g. negative and positive signs) and here our diagrams approach on the one hand to algebra and on the other to the consistent pictography such as Otto Neurath developed in his Isotype.

Histograms and Sector Diagrams

Diagrams are often used to show quantities by reference to areas. These can be misleading unless care is taken in their use. If an inch square represents a certain quantity, a two-inch square (i.e. a square with a two-inch side) will represent four times that quantity. If it is desired to represent twice the given quantity in area form by means of a square its side will be slightly greater than 1.4 times the side of the original square. This is not a good way of making plain such matters. It is far better to use rectangles of constant width, and their lengths will then be proportional to the number which they represent. Such rectangles can be divided by the use of colours, shading, black portions and so on to show proportional quantities, e.g. the rectangle complete may represent a number of people suffering from a disease, the black portion those who die from the disease, a shaded portion those who continue to live but are not well and the remaining white portion those who are completely cured. A number of rectangles of the same width when put together vertically give a histogram (a

histogram can also be made with horizontal columns but its mental effect is better when empathy is allowed to play its part and the quantities rise with the rising columns).

A histogram can be used for showing distributions, for example, the number of men in a sample of 10,000 whose heights are between certain limits, each range being the same distance. The intelligence quotients or examination marks of a large sample of children may be expressed in the same way. When the

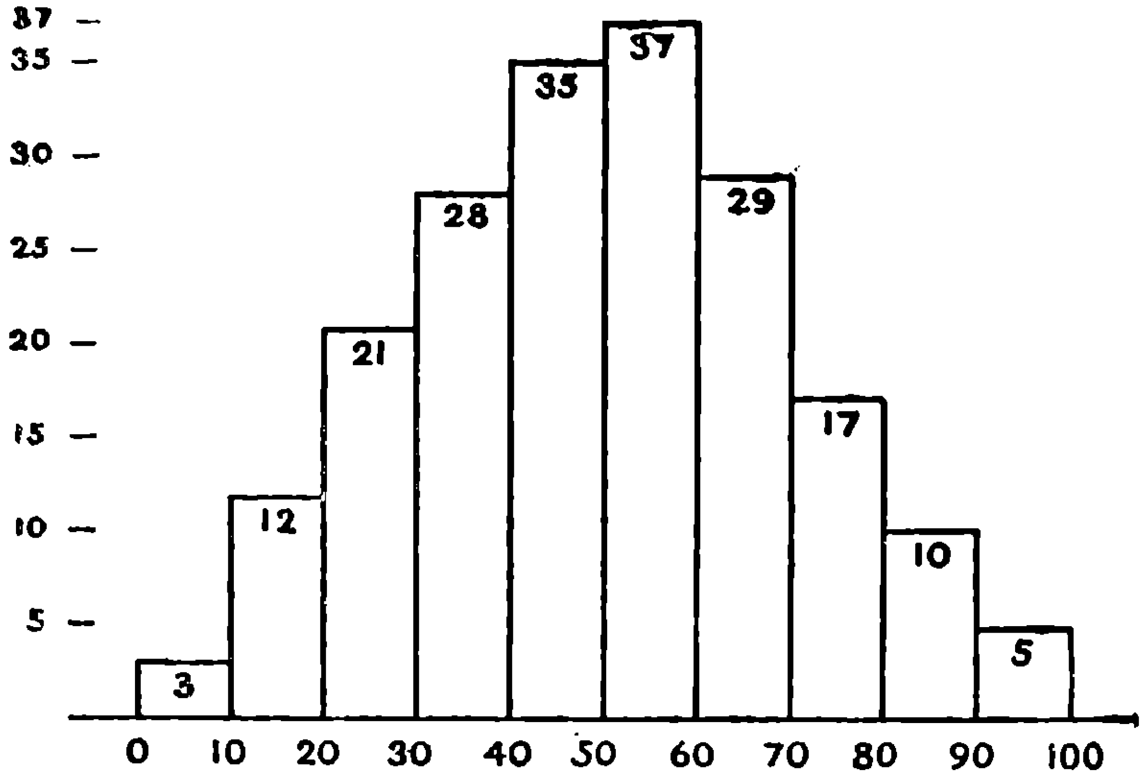

FIG. 6

The figures in the columns represent the number of children in each mark group. The marks from 0 to 100 are divided into 10 groups. (0–9, 10–19 20–29, etc.).

numbers in the sample become larger, thinner columns may be taken and when the tops are joined and smoothed we get a *distribution curve*.[1]

In order to obviate difficulties which arise by using squares and circles of different sizes, (though these do not arise when we use columns or rectangles of the same thickness), Neurath used symbols to represent certain numbers, say, each 1000 people, and used an appropriate number of equal symbols to express quantities of particular things.

[1] *Statistics in School*, by W. L. Sumner (Basil Blackwell).

The *sector diagram* is frequently used particularly in early work in quantitative economics. It is sometimes known as the pie or cake diagram, because we have one circular shape which is divided into slices or sectors. The area of each sector is proportional to its angle, that is to say, the angle between the two radial cuts which are necessary to make it. The total round of angles is 360° or four right angles, and thus the proportional area of a sector of x° to the whole circle will be $\frac{x}{360}$ or x to 360.

The whole cannot be exceeded as it stands, and thus the cake analogy is often used by politicians and their economic soothsayers for expounding their ideas concerning national income, imports, exports, personal incomes and the way they are shared. The sector diagram in colour, or with appropriate

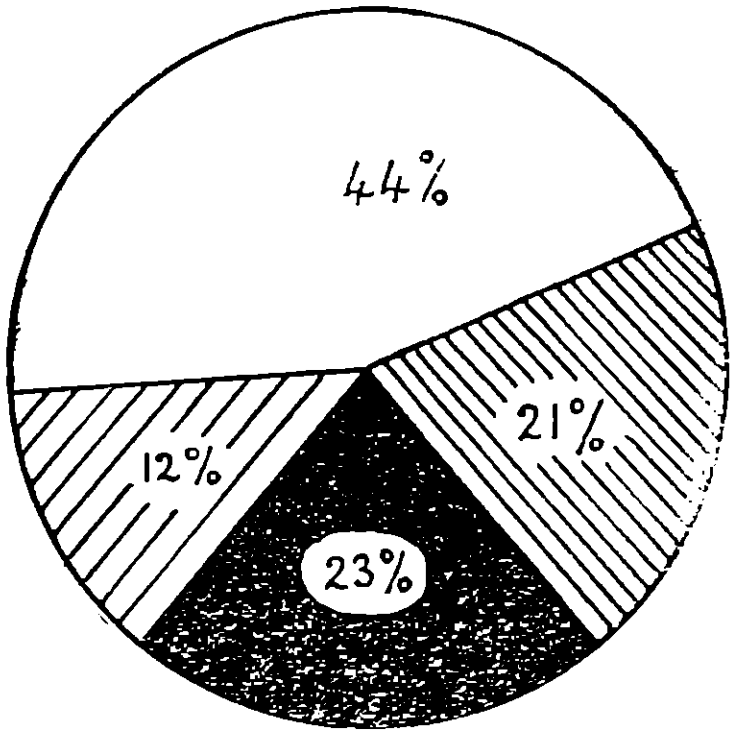

FIG. 7
SECTOR DIAGRAM
The sector diagram is used to show proportional division e.g. the division of the National Income or the Population into parts or groups. A clock face with hands may also be used.

black and grey patches is a good way of showing how a whole may be shared or divided-up. In view of the fact that to the non-mathematical mind the $\frac{x}{360}$ proportion for a sector of x° will not be immediately apparent, except in simple cases, it is better to label each sector with its percentage equivalent of the whole. When

several sector diagrams are used they should have the same diameter, for it must be remembered that if we double the diameter we multiply the area, *which is the thing with which we are concerned*, by four. Otherwise it is better to use rectangles of the same breadth to show area proportions.

Posters[1]

As the general principles of poster-work find application in so many visual methods it is worth our while to consider them briefly. A good poster should (1) Attract attention, (2) Hold the attention, (3) Deliver its message directly. Posters should deal with one theme for each poster and, if necessary, should be arranged in order, so that their sequence makes apparent the story they have to tell. They can often be used effectively in conjunction with large pictures. When several posters are used as in a school exhibition the same style of lettering should be adhered to throughout. Where repetition is necessary to aid memory, or to reinforce a point, differences in colour or wording should be used rather than changes in size and style of lettering. Everything should be simple, direct and short: twelve words is a useful maximum for each sheet. Poster colours in the Ostwald system help those who have difficulty in blending colours, deciding on correct backgrounds or envisaging correct colour contrasts. Commercial posters take the *sheet* as the unit. A single sheet is a rectangle of 20 in. x 30 in. (double crown size).

The minimum heights of letters, when bold clear shapes have been used with black on a light grey or white ground, with normal vision are[2]

Distance (feet)	Large size (inches)	Easy to read (inches)	Fairly easy (inches)	Possible (inches)	Cannot be read (inches)
70	4	2½	1¾	1¼	¾
40	3	2	1	¾	½
20	2½	1½	¾	½	¼
10	1	1	½	¼	—

[1] See *Making a Poster*, by Austin Cooper, published by The Studio.
[2] Given by Colin Beale in *Look and See.*

For working with large sheets of paper, a large drawing-board or good table surface is necessary. Horizontal guide-lines can be drawn in pencil and it is also convenient to supply a few verticals in most cases. Some workers use an inch-square graticule, and others do their initial designing on squared paper before it is transcribed to its permanent form. Those who have had no experience with poster pens, lettering pens, ball point and script pens may find that they still achieve good results with the *Justrite* show-card pen. Many excellent stencil systems are now on the market and, if much lettering work has to be done, it will be well to acquire a stencil outfit.

A Map-Like Environment

This was a phrase employed by the late Otto Neurath to describe the exhibition technique which showed, on walls and stands in correct position, pictures, models, panoramas, maps and printed material with suitable lighting, framing and attention to background, so that the whole was artistically attractive, unified and made a logical appeal to the earnest student. It is a technique much used now for the transportable exhibitions for instructional or propaganda purposes, e.g. the atomic and penicillin ' trains ', the R.A.F. trailer exhibition, the G.P.O. and C.O.I. exhibitions, the National Council for Industrial Design and the special exhibits in the national museums. Such arrangements may be regarded as visual books, and much information is presented in a compressed but very attractive form. If only one topic is dealt with at a time and is followed with active teaching and projects worked by the class it is a very useful method. In the ' map-like ' environment the whole of the visual book can be seen by a number of people at the same time.

Models

Good models have some obvious advantages over two-dimensional representations. They can be handled, seen from a number of angles, and make plain certain spatial relationships

and points of construction which would be difficult by using the devices peculiar to the flat surface.

There is a language of models just as there is one of pictures. It is sometimes not easy to interpret a model because of a viewpoint which is different from that with which the original object is viewed. The mind finds difficulty in magnifying the model until it has had experience of interpreting real things in terms of models, and vice versa. A very small model is apt to slip out of the scheme of things which it represents and then it has little value.[1]

The psychological effect of a building largely depends on our ability to look up at it from certain viewpoints. Shape cannot usually be considered without size, and a true model which is a faithful reduction in the linear dimensions of an object may be misleading in many ways. Take for instance the model of a locomotive. Suppose the model is made to a scale of 1/50th of the linear dimensions of the real object. Its surface area, including that of the heating surface of the boiler, will be only $(1/50)^2$ or 1/2500 of the original and its volume including water in the boiler and cylinder capacity $(1/50)^3$ or 8 millionths of the original! These are simple yet important considerations. When volumes, areas and lines are used to represent quantities diagrammatically, similar ideas must be borne in mind. For instance, ship cargoes, imports or exports are sometimes compared by using two-dimensional pictures of strips on flat surface. We have to ask whether the tonnage is given (*a*) by the implied volume of the ship of the area shown, (*b*) by the actual area shown, (*c*) as a linear quantity by the length of the ship. Much misconception has resulted by loose thinking in these matters.

Enlarged 'models' of objects will often produce wrong ideas. If a mosquito or spider were magnified so that all its linear dimensions were multiplied by a factor of 20, its legs would not suffice to bear the weight of its body. The 'diameter' of its

[1] The models supplied with the Ministry of Education Visual Unit *Houses in History* were far too small. A range of models made on sound educational principles may be obtained from F. C. Jacobson, 5 Carlton Road, Derby.

legs has increased by the linear factor and this has tended to make them more easily bent and broken because its body-weight has increased by the cube of the factor.[1]

Models should be as large as they conveniently can be. They should not be slavish imitations of the original and all details of secondary importance should be eliminated. Where models of comparable objects are used, they should be of the same scale.

Models can be made under instruction by children who do not appear to be gifted enough to do other forms of creative work. Papier mâché[2] is a cheap and simple substance which can be used for many types of models and for puppets. Newspaper and other paper of soft and loose texture should be torn into small pieces and soaked in water in a bucket for two or three days. Thereafter, the surplus water is drained off and expressed from the mass, which can then be moulded into shape. When it is thoroughly dry it can be painted with oil-paints and varnished, if necessary. Some workers add a little glue or seccotine to the water during the soaking process and this produces a model which is even stronger and more rigid than when only clean water has been used. Smaller models can be made of plasticine and modelling wax. The latter is particularly effective for making models which illustrate biological development, such as the various stages in the growth of a fertilised cell. For small models or parts of models Pyruma cement gives admirable results. In its moist state it can be moulded or cut with a knife and the drying process can be hastened by baking it. Blocks of this substance can be joined together with Tiluma cement and it can be filed, drilled and cut with a saw, sized, painted and lacquered.[3] Where suitable moulds can be prepared, models can be made by using plaster of Paris.

[1] See in *Science for Seniors*, *The Build of Animals*, by Andrade and Huxley; also *Growth and Form*, D'Arcy Thomson.

[2] Further details of the process are given in Leaflet 93, published by Dryad Handicrafts, Ltd., 22 Bloomsbury Street, London, E.C.1.

[3] The method of working, with suggestions for suitable models, are given in a leaflet obtainable from the makers, J. H. Sankey and Sons, Ltd., Aldwych House, London, or from Messrs. Bassett-Lowke, of Holborn.

Another technique which is sometimes used in schools is to make a model in plasticine and cover it with papier mâché which is then allowed to dry. This is carefully removed, (making a single clean knife-cut in it if necessary), and the inside of the papier mâché shell is used as a mould for making the plaster cast.

Working models made with Meccano, or in the school wood and metal workshops are more interesting to children because they move. They can also be made for teaching simple engineering and many scientific principles.

Enlarged models, made of wax or by using the materials already mentioned, are useful in biology, e.g. for illustrating cell division, insects and their control, etc.

Models require storage rooms and should be protected from dust when they are stored away. They can be used effectively in the teaching of scripture, mathematics, science, history, geography, drama and civics. The making of models is a most useful exercise for children who are not intellectually gifted, and it will not be without its values for those of superior intelligence. Backward children, working under supervision, will learn through hand and eye, when designing and constructing models, in a way which would be quite impossible with more abstract and passive methods.

Pictographs and Picture Languages

Various symbols, such as the simple outline of the human form, or pin-men, have been used on pictures and diagrams for instructional purposes. Simple stories or notices have been told in picture languages for illiterates or for peoples who do not understand any of the common European languages. Because various symbols have been used by different authors to represent the same thing, and there has been a lack of consistency in the size of the symbols, the matter has been standardised by the late Otto Neurath in *Isotype*. Formerly, symbols of the same shape but of different area were used to show differences in quantity or number.

Neurath standardised each symbol according to size, and quantitative differences were shown by multiplying the symbols in number. A simple colour scheme was also devised; for instance, agricultural products may be green and human beings red. When the symbols are used for giving rough statistics care should be taken to distinguish between absolute and comparative (e.g. percentage) numbers of individual people or things which have to be represented.

Isotype

Isotype is the name of a consistent method in Visual Education based on standardised symbolic elements. The word is composed of initials :

International
System
Of
TYpographic
Picture
Education

and may be translated from the Greek as ' always using the same types '.

These elements form an elaborate auxiliary international language which is used for giving information and for teaching through charts, models, lantern slides and animated diagrams; only a few words in an everyday language have to be added as titles and explanatory remarks. These visual aids to communication deal with biology and history, geography and engineering, chemistry and history of arts, public health and housing, climate and language, natural history and social sciences.

The Isotype Symbols are designed to be self-explanatory. The Isotype Dictionary is composed of more than 2,000 such symbols, representing men, machines, trees, animals, lungs, furnaces, bulbs and other things, or groups of such things. Not only the shape but also the colour of a symbol characterises something.

The ISOTYPE GRAMMAR may be compared with the sets of rules which describe the use of Egyptian hieroglyphics.

The ISOTYPE TRANSFORMATION is the act of transforming the results of scientific research into Isotypes. (' Isotype ' originally the name of the method itself, is now also being used for designing

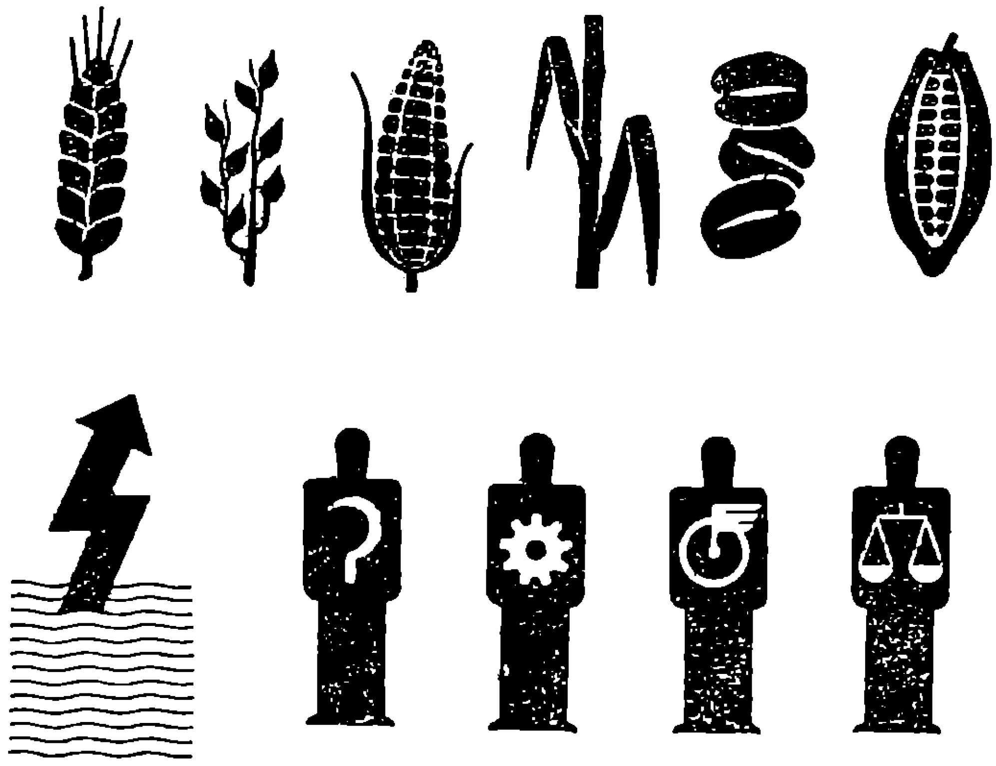

FIG. 8

STANDARD ISOTYPE PICTOGRAM UNITS

Top row: Wheat, rice, maize, sugar-cane, coffee, cocoa.

Lower row: Water-power, people occupied in agriculture, manufacture, transport, trade.

charts and illustrations which have been made in harmony with the rules of Isotype). In the characteristic Isotype style everything has to be reduced to its bones, the argument on the one hand, the design on the other : The Isotype Transformer has to bridge the dangerous gap between the experts in knowledge and the experts in drawing. That is based on a highly specialised technique like map-making and needs a particularly skilled staff and comprehensive collaboration; the results of which are brought to the public eye by reduplicated wall charts, illustrations of books, lantern slides, films or other visual aids.

Isotype grew from a small museum founded in 1923 in Vienna

by Otto Neurath to explain in the simplest manner the social sciences to everybody. In view of the world-wide interest shown in the little museum, Neurath founded the Mundanem Institute in Vienna, transferred to Holland in 1934 and established it in England in 1942.[1]

Isotype has uses in films and simple explanatory books where direct explanations and figures are required. It is useful in ' the map-like environment ' and in certain post-war circumstances its international aspects are invaluable. Some authorities see in it a danger that it may tend to inhibit translation into verbal languages.

[1] 'A picture, making good use of the system, gives all the important facts in the statement it is picturing. At the first look you see the most important points, at the second, the less important points, at the third, the details, at the fourth, nothing more—if you see more, the teaching-picture is bad.'

'A good teacher is able to keep out all unnecessary details. For the selection, a clear sense of the needs of education is important, and a good teaching-picture may only be produced with the help of a good teacher. The value of teaching by pictures, is that facts are put before the mind in a simple, straightforward way and are kept in memory. A good teacher is conscious that only a certain amount of knowledge will be kept in mind. So he puts into his picture only what is necessary. He is of the opinion that a simple picture kept in the memory is better than any number of complex ones which have gone out of it.

' Sometimes a comparison is made between education by pictures and business advertisement by pictures. This comparison has its limits. Every business advertisement is in competition with every other and necessarily has the tendency to put all other such pictures out of the memory of the onlooker. Attempts to get a general advertisement will not ever come to anything. Every advertisement has to be different from all others. Not so the teaching pictures. One has to be like another so far as it gives the same details, and to be different from another only so far as the story it gives is different. All pictures are part of a unit : they are using the same language. Signs of the same language are put together in harmony with the same rules. This is the reason why long experience and special training is needed for the process of putting the material given by science into teaching pictures.

' The man of science has to make clear-cut statements on which other clear-cut statements in different branches of science may be based. The picture-maker has to be guided by the rules of education by the eye and to make a selection of material which will give a certain teaching effect, but it is not his purpose to give a full account of all the facts. The outcome of this is that a number of experts in science are not supporters of this system, and are even of the opinion that it is a danger to the rules of their science. But the needs of education are of a different sort from those of science and they have to be worked out by men with a special outlook and training.'

This passage, written in Basic English is taken from Otto Neurath's little book *International Picture Language* (Kegan Paul).

This need not be a difficulty if the need for translation to and from a verbal language is constantly kept in mind.

The Contrived Experience or ' Mock-Up '

The ' mock-up ' is a near approach to direct experience. Apparatus, etc., is contrived so that it functions as nearly as possible to its behaviour in real life, e.g. an aeroplane which is grounded is used for training, a coal-face and cutter exactly as in a mine are used for instructional purposes. The chief values of a ' mock-up ' are (*a*) a play or reconstruction of a dramatic or other incident (*b*) use of ' dummy ' but otherwise realistic apparatus, machines and instruments in environments approaching their usual ones in order to give an effect of verisimilitude in training.

' Reality in the Classroom '[1]

This is practically a direct experience. Visits are paid to the school by various workers or teams who describe their working lives and answer questions, e.g. postmen, letter-sorters, sweeps, road-sweepers, health-visitors, etc.

Direct Experience

This is real education. Visits to factories, offices, other villages, towns, cities, foreign countries, centres of industry, churches, museums, local government offices, and civic buildings are of great value in education. They should be well planned so that they become a part of a lesson scheme or project. Notes should be made, cinema or still films should be taken of interesting scenes; a planned scheme of study with questions by the children, and later the making of more elaborate records will enhance the value of the visit. The visit may be prepared for by a preliminary lesson dealing with the subject of the visit and it should then lead to further class-room work.

[1] See also *Actuality in School*, by Cons and Fletcher (Methuen, 1938).

A Note on Stereoscopy

The stereoscope is an optical instrument but is not normally used for projection purposes. Without moving the head (and thus invoking the aid of parallax by slightly altering our viewpoints), our two eyes, which see things from slightly different positions, give the mind the possibility of perceiving the world in its three-dimensional form. In stereoscopy, two photographs are made, either with a double camera or by carefully moving a single camera laterally a distance of about 2½ in., the average distance between human eyes. The pictures are then viewed side by side through lenses so that they appear to combine, and thus a sense of depth is given to what would otherwise have been a flat two-dimensional picture. Stereoscopes and stereoscopic pictures may be bought in several forms. An American and French pattern has miniature colour films arranged in pairs on the periphery of a circular disc. The general effect is most attractive. Stereoscopy is useful for the remedial exercises necessary to overcome certain eye defects such as squint. It is particularly useful in geography teaching in order to make contours, and the topography of countries depicted on stereoscopic maps stand out plainly.

A further bibliography for this section is given on page 208.

BIBLIOGRAPHY

See What I Mean, Ray, Cassell.
The Craft of Model Making, Bayley, Dryad.
Modelling Geography, Barker, Ginn.
Illustrative Model Making, Evans and Udale, Longmans Green.
Modelling, Petrie, Dryad.
Model Construction for Juniors, Benton, Pitman.
How to Look at Geographical Pictures, Watkins, Macmillan.
Blackboard Drawing, Crichton, Nelson.
Blackboard Illustration, Perry, Manual Arts Press.
Improving the Blackboard (Report No. 7), Seymour, National Institute of Industrial Psychology.

CHAPTER IV

VISUAL METHODS AND LANGUAGE[1]

' My own profession is technically that of master of language; and I have been plagued all my life by scientists, clergymen, politicians and even lawyers who talk like parrots, repeating words and phrases picked up from one another by ear without a moment's thought about their meaning, and accept mere association of ideas as an easy substitute for logic.'

G. B. Shaw in the preface to ' The Miraculous Birth of Language,' by *Richard A. Wilson.*

' Visual education can become significant only when it succeeds in transforming learning from an additive to an integrative process. Hence an insistence on a linguistic approach to visual education, on the search for a grammar and syntax of visual elements, and on the need for logical principles of visual production.' *G. P. Meredith.*

LANGUAGE is important not only because we use it to communicate our ideas to others, but it is also the chief vehicle for our own thinking processes. Language is not only our link with the present, but it puts us in relationship with the past and the future. Words are used in place of things and actions, and it is possible by a vain usage of words to produce a superficial appearance of knowledge. The child can act as a word-receiver and a word-transmitter without any understanding of the meaning, and without an exploration of the content of the ideas which are implied. It must not be assumed that the application of visual aids will automatically cure this trouble. Pictorialism and symbolism may be just as vicious as the first complaint. The intelligent application of visual methods will almost certainly lead to fuller understanding. The visual technique itself constitutes a language, and the translation from the visual to the verbal

[1] This chapter is placed at an early position in the book because the nature of the visual language is fundamental to all considerations concerning visual methods.

F

language will demand a process of thinking about that which lies behind the language. Thinking is a process which is relatively easy when it is done in the presence of the objects which it concerns, but imaginative thinking is a more difficult process. Literature, history, geography and scripture often use words which stand for things about which the child has no direct experience. He is only able to extend his previous experiences, and that in a limited manner. Often the child is baffled and confused and has false and ill-defined associations called up by the words he is using.[1] It is obvious that his difficulties with abstract ideas such as those represented by the words *faith* and *honour* will be greater.

Let us consider a French child learning the English word ' dog '. The action is really quite complex and is an association of eight elements :—

1. The object itself, i.e. a real dog or a picture of one.
2. The sound of the spoken word.
3. The neuro-muscular experience of making the sound.
4. The appearance of the written or printed word.
5. The neuro-muscular experience of writing it.
6. The visual experience of seeing the teacher's mouth producing the sound.
7. The visual experience of seeing the teacher's hand writing the word.
8. The corresponding word ' chien ' in the mother tongue.

These eight elements give us a network of associations and the learning process implies the mastering of this network. The accompanying chart shows that the network can be divided into triangles and squares. The simpler figures suggest exercises by which the child passes from the simple association of any two elements, e.g. sound with image, to the complete network.

[1] The delightful nursery story of the little girl who called her teddy-bear ' Gladly ', because a line in her favourite hymn was ' Gladly my cross I'd bear ', is an example.

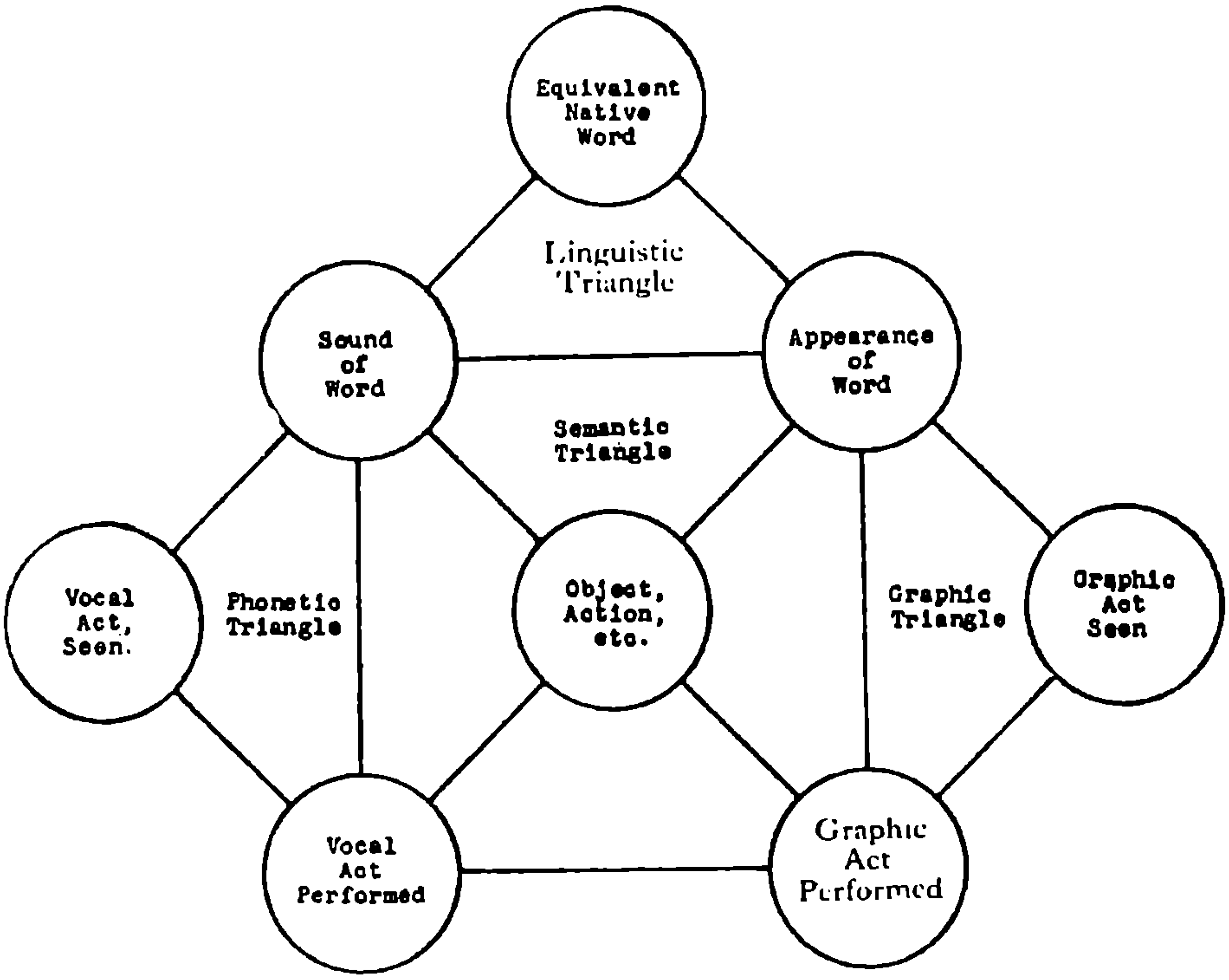

FIG. 9.

1. The 'semantic' triangle which associates the sound and appearance of the word with its meaning (i.e. the dog itself).
2. The 'linguistic' triangle which associates the sound and appearance with the native word 'chien'.
3. The 'phonetic' triangle which associates the sound with the appearance and sensation of the vocal act.
4. The 'graphic' triangle which associates the appearance of the written word with the appearance and sensation of the act of writing it.
5. The 'audio-graphic' square which associates the sound and appearance with the sensations of pronouncing and writing, and all four with the object itself.

It follows that :—

1. For nouns, verbs and prepositions, children need to see actual objects, actions and situations and failing this, secondary experiences in the form of pictures or films.

2. To master the sounds they need to observe closely the mouth movements of the teacher or of a native, directly or by film.
3. Where the alphabet is unfamiliar they need to observe the writing action directly or by film.
4. They need clearly printed books and equal attention to letter formation on other educational material.[1]

In the study of the visual languages Meredith has distinguished four main modes which he calls, Homographic, Schemagraphic, Typographic and Metrographic.

1. Homographic Mode: e.g. photographs, paintings, realistic drawings; certain aspects of maps and diagrams.
2. Schemagraphic Mode: e.g. pictographs (such as Isotype) cartoons, stylised diagrams, certain road signs.
3. Typographic Mode: Written language, conventional symbols on maps, wireless diagrams, etc. (though some of these symbols are semi-schemagraphic), chemical and mathematical symbols.
4. Metrographic Mode: map projections, graphs, structural chemical formulae, and all family-tree type diagrams where a strict logical relation exists between the diagram and the system depicted.

If a consistent style could be agreed upon for the languages implied by these modes with their own rules of grammar, the translation of ideas expressed in one language to another would be rendered easy.

[Semantics studies the relations between signs and items signified.

Pragmatics studies the relation between signs and persons receiving them.

Stylistics studies the relation between signs and persons sending them.

Syntactics studies the relation between signs and other signs.]

[1] Based on a scheme given in a pamphlet ' Visual Aids in the Teaching of English ', by C. Patrick Meredith.

The child of nine should take an interest in simple plans of his school-room, the tea-table at home, the garden, and the divisions of the playground made with chalk-marks for the use of simple games. The diagram, which demands a process of analysis, should be related to the picture of the scene, and the actual objects or the model. Too often it has been assumed that because the diagram is less complex than the actual thing which it represents, it is always easier to comprehend. Diagrams use a symbolism, even though it is so simple that it may not be regarded as one. From the start the diagram should be seen in reference to the thing which it represents, and the actual object in reference to the diagram. It came as a shock to military instructors at the beginning of the last war to find that comparatively few men could envisage the main features of an area of a country by reference to a map. Even mature travellers find that this and the related ability of ' navigating ' in or over a strange country are not easily acquired. Nor is the meaning of a picture always as obvious as the artist believes, even where its intended message is purely cognitive. From diagrams and plans which are within the everyday experience of the child we can pass to examples which are outside the ordinary circle of the child's environment.

Although there are a few poems and passages of prose which were written with the purpose of producing a pleasing sound without reference to their meaning, the fact remains that literature can only be appreciated if it is thoroughly understood. The teacher must try to find the happy middle way between a a superficial treatment which leads to misunderstanding and the destruction of the unity of the passage by over-analysis.

In schools, young children can usually be trained to use language to describe what they actually see either in real life or in pictures. In an essay or composition the child has to go a step further and describe in an orderly manner that which he can no longer see. In other words, he has first to arrange his mental pictures in an orderly sequence. Conversely, in studying liter-

ature he must produce a correctly arranged image of what he is reading, and moreover, one which is capable of movement. When this is not properly considered by the teacher ' it is a great gap in our school work. It results in shallow and confused composition and shallow and confused comprehension of literature.'[1]

With children up to the age of eleven, useful work can be done by leading them to give narratives and answer questions relating to diagrams and plans which are within their experience. The playing of Scout games where certain directions have to be followed, where the treasure can only be found by visualising a diagram or map and then carrying out operations in ordered sequence, is a great help.[2] In describing the operation each sentence may correspond to a line on the diagram, and a sequence of lines should call for a sequence of sentences. Simple plans of gardens or of mazes, adventures in caves, underground passages, mines, the corridors and staircases of a large building and so on are suitable. The diagram can be made from the description and later used as a basis for questions and comprehension tests.

Outdoor work may make reference to the position of the sun at noon and at other times, the directions of prominent objects, the plan of the district in relation to its actual appearance, the sensations of walking along the streets with as many observations as possible and so on. This will lead to memory and imagination work, in which the child imagines that he is in a certain place, and describes what can be seen in various directions. In ' Scouting for Boys', Lord Baden-Powell advised his youthful followers to practise careful visualisation, to remember what they had seen, and to describe in logical order their visual experiences. Nothing more useful as a tool to the young thinker could be imagined. In transfer examinations (which children take at the age of eleven before admission to secondary schools), diagrams or pictures, on

[1] M. M. Lewis, *The Use of Diagrams in the Teaching of English* (Ginn).

[2] Some of these and other examples are given in the English Courses by Lewis and Stewart (Ginn). See also *Scouting for Boys*, by Robert Baden-Powell.

which are based questions which demand visualisation, appreciation, the combining of images and translation into words, are useful and important tests in an English paper.

The use of visual imagery in literature[1] is only a means to an end and a complete dissection of a poem or a prose passage with analysis of form, style, various devices in the use of words, does not guarantee the appreciation of literature. The ' *idea* ' of the passage and the experience of the writer which it reflects, may call forth no reaction in the mind of the reader or hearer. A careful study of the route between Ghent and Aix from a map, and an attempt to place the incident in history are of little use in the understanding of Browning's poem. Having said this, it still remains that there can be no real understanding if there is defective imagery, whatever may be the type of imagery. Here are some lines, taken almost at random from poems, which will evoke visual imagery in most people.

' Storied windows richly dight
Casting a dim religious light.' *'Il Penseroso,' Milton.*

' Surveyed o'er my three claviers
yon forest of pipes.' *'Master Hugues of Saxe-Gotha',*
Browning.

' I fled Him down the arches of the years,
I fled Him down the labyrinthine ways . .
'The Hound of Heaven,' Thompson.

' Season of mists and mellow fruitfulness.'
'Ode to Autumn,' Keats.

Imagery of sensual and more subtle kinds is combined in poetry and its appeal depends on the sensitivity, the experience and the sensory tendencies of the reader. A ' non-visual ' would have difficulties with Francis Thompson's ' arches of the years '. Many people have such strong form and colour imagery that

[1] E.g. Defoe's power of visualisation is seen in his graphic accounts of incidents which he gives in *The Journal of the Plague Year*. In fact they were quite imaginary and he was an infant and not in London at the time.

musical sounds appear to them in shapes and hues, e.g. 'The round tone of the boy's voice;' 'The flaming red of the trumpet;' 'The pale yellow of the soft flute'. Of course, this is subjective synaesthesia which varies from individual to individual, and when attempts are made to give objective impression to these images, as for example in the moving abstract patterns employed with Bach's Toccata in D Minor in the Disney film 'Fantasia', the effect will be bewildering and irritating to many people. Visual images should not be necessary to enhance the effect of great music. The imagery is of a different type here.

The diagram, whether drawn on the blackboard or in the exercise book, whether presented by optical projection or on a sheet of paper, is useful if it gives a starting point for more colourful and detailed imagery. For the purpose of following a story, imagining further developments in a situation or for quickening and enriching the meaning of a narrative, the diagram or sketch is often better than an elaborate coloured picture which, by the intense detail of its own images, may inhibit the natural and personal development of those in the child mind. Of course it can be argued that good illustrations in a book have other purposes. If the narrative is one which deals with facts of biographical, historical and geographical significance, the use of actual photographs and copies of original pictorial material may have a realism which is absent from the sketch, but even here the mind has to perform the task of extension and interpretation. It will usually have to extend the two pictorial dimensions to three in the imagination; it may be required to perform feats of magnification; it may have to turn the static into the dynamic, the monochromatic into the coloured. Even here, practice in interpretation and imagination are required. Even the finest colour-photographs, models and films can give but a feeble idea of the majesty of the Victoria Falls, the Matterhorn or a storm in the Atlantic; but the picture may help to reconstruct and extend an experience, and it will tend to make vivid a good verbal description.

It must be confessed that to many people the best illustrations fall short of the conceptions which result from the intense imagery evoked by a good poem or prose passage.

Further, it must be admitted that the value of an illustration is not only cognitive but also orectic. Illustrations may be intended to heighten emotional interest in the work which they represent. Publishers know the value of striking book-jackets (which sometimes belie what is found within). Poster advertisers usually prefer the appeal of an attractive maiden to the factual language of the graph or histogram. Attention is thereby secured and subsequent thinking is then biased by emotional factors, even though this might not be consciously recognised. The orectic element in pictures used for educational purposes is a two-edged sword. It may result in a superficial attraction, and the mind may be diverted from its desired course of seeking a meaning, of understanding and developing ideas, but if it is used properly it may both rouse and sustain interest. An example, which readily occurs to the mind, is the use of good coloured pictures of real artistic merit, in which recognition of good composition, lighting, excellent printing and materials at once attracts the looker.

Some examples of the use of the diagram in the study of prose and poetry are :

The Gold Train : Westward Ho ! : *Kingsley.*

Robinson Crusoe fortifies his dwelling : Robinson Crusoe : *Defoe.*

The Bridge : The Mill on the Floss : *Eliot.*

These three examples are analysed by Lewis in his useful booklet.[1]

Others which come to mind are :—

1. Prospero's island : The Tempest : *Shakespeare*, and the stage settings of other plays. Preferably the pictures and diagram should only be an aid to the acting of the plays (or parts of them) in the class-room.

[1] See M. M. Lewis *The Use of Diagrams in the Teaching of English.*

2. Treasure Island : Kidnapped : *R. L. Stevenson.*
3. The Adventures of Hannay in Scotland : The Thirty-Nine Steps : *John Buchan.*
4. The Adventures of Sherlock Holmes *Conan Doyle.* Other detective and adventure stories.
5. King Solomon's Mines : *Rider Haggard.*
6. Gavroche in the ' Elephant ', Les Misérables : *Victor Hugo.*

Many of the references to classical myths and stories can only be understood by children when they are aided by diagrams and pictures. Most of the incidents in the Bible only approach reality when they are illustrated by diagrams, maps, models and pictures. It is unfortunate that so much crude drawing and painting has been uncritically accepted when it was used to illustrate Bible stories. Every effort should be made by those producing such pictures to insist on a generally better standard in these matters. If the child is able to draw a diagram or picture by using the legitimate inferences from a text it is a great help to him. It is really a form of translation from one language to another. In the end it involves the ability to understand and create by using both the verbal and pictorial languages as media. The production of a successful sketch, even though it may be delineated crudely, should be used for further development of the story and for the imagination of further incidents. In particular, stories demanding pictures, which show movement in sequences, provide useful material.[1]

The analysis of a story should not be overdone and the wise teacher will soon sense the points at which a quick reference to a diagram or picture will be a help. A useful exercise, which can

[1] The enormous popularity of the picture-story strips and cartoons for children of all ages is sufficient to show the emotional grip of such methods. Unfortunately, they are not always used for worthy purposes, nor do they encourage vital thinking. An alternative is to have a better quality picture and to use film-strip and a projector.

follow the use of a picture or diagram as an aid to the appreciation of a narrative, is to use the diagram for a continuation or a variation of the story. The imagination of further incidents which could logically have been given by an author will be a further help. The pupils' account of such added incidents will prove to be a useful exercise.

With other children at the secondary school stage this work can be developed by the use of pictorial maps and finally of ordinary maps and plans from which all pictorial elements have been excluded. Thus is the child encouraged to develop fuller powers of visualisation. From the concrete pictorial view or scale model we proceed by easy stages to the abstraction of the map or plan. (This is dealt with more fully in the section on Geography.)

It is not possible to exhaust the useful examples which can be thought out to illustrate this method. There should be a two-way traffic : diagrams should be translated into sentences and sentences into diagrams.

1. An account of a journey in town or country using pictorial diagram or pictorial map.
2. The use of railway maps, maps of bus routes, the London underground system, etc., as the basis of narrative work. The rule of the road, traffic regulations, an accident.
3. The description of a church, cathedral, museum or other public building.
4. An account of what to look for in buildings.
5. An account of the plan and lay-out of a house or a flat. An excellent collection of material suitable for this purpose will be found in the 'Housing Manual', H.M.S.O.

Often a child will respond much better to a narrative, in which the action takes place in circumstances which are far removed from his experience in place or time, if he is afforded visual help in the form of pictures. Even diagrams and quick blackboard sketches will be a help, and at times will be more useful than

detailed pictures which might consolidate the imagery too much and not encourage the child to build up his own images from the skeleton material supplied by the diagram. The pictorial diagram with the narrative should enable him to arrive at a fuller and more vital imagery of the moving scene and thus enhance his appreciation of the story in geography, biology, history and scripture.[1]

The Use of a Diagram for Explaining a Process

Here at various stages we may use the example of making a lantern slide, of ' lacing-up ' a film projector, of preparing and conducting a simple scientific experiment, or the construction of a useful object in simple handwork, metalwork or carpentry. (See page 109).

Expository Diagrams

An important aspect of the increasing awareness of the world and its complexities is the need for wider and improved exposition concerning modern social problems. Science by its achievements in transport and communications has made the world a much smaller place, but it has also made it larger and more complex with its multitude of technical devices which sustain (and could improve) life in the mid-20th century years. It is essential that all citizens should have some understanding of the forces which are at work to-day. Some of the achievements of applied science and the complexities of modern social and economic life can often be made plain in the form of pictures, diagrams, models or Isotype, but always these should be related to precise description and the comprehension of statements made in the mother-tongue.

[1] The late Sir John Adams in his *Exposition and Illustration in Teaching* gives an example of a lecturer who tried to illustrate the majesty of the cataract of Niagara in terms of a cubic mile of water. It is not humanly possible to imagine the size of a cubic mile, small though this is in comparison with that of a small planet like our earth. The lecturer succeeded in giving his audience the impressions (*a*) that Niagara was only a small dribble, (*b*) that a cubic mile is so large that the human mind cannot grasp it as a capacity measure. This was not his intention. (A considerable number of days are requiredfor Niagara to discharge a cubic mile of water.)

The Symbolic Diagram

The diagrams so far considered have been conventionalised from actual visual experience and they are all concerned with the analysis of such experience.

One of the most useful forms of the diagram is that which symbolises a relationship or an action. Examples of such diagrams are a genealogical tree or the circular diagrams used to symbolise a unit of simple deductive reasoning (a syllogism). The symbolic diagram is never self-explanatory. Its visual symbolism has to be understood and then translated into or supplemented by verbal language. This demands clarity of thought, accuracy in the choice of words, and a technique of objective statement.

The graph and histogram are methods of showing the variation between quantities and the grouping of numbers of things in columns so that they can be compared by simple visual inspection. Moreover, by their *intelligent use* (e.g. extrapolation and interpolation) trends may be seen, ideas and schemes of thought extended and hypotheses formed. The statements which they have to make in their particular language can be interpreted in verbal terms. It is necessary in the teaching of English, mathematics and civics to give practice in the translation of verbal statements to graphs and histograms, and vice versa. Many examples occur in daily life, e.g. population trends, price levels, economic data, examination marks, scores in games, simple weather, biological and other scientific phenomena. These things are not only important for the development of thought and language, they are also specially necessary for that understanding of social and economic problems which is the foundation of good citizenship. Teachers who are concerned with language training are also inevitably concerned with the social organisation of the community. The interpretation of the graph and the histogram are therefore not out of place in the English lesson. ' Diagrams provide bridges between experience and language and so lead children naturally and progressively into the world of verbalised thinking.'

VISUAL METHODS WITH BACKWARD CHILDREN

It has sometimes been imagined that visual methods will solve most of the difficulties of teaching backward children. In the world of ideas the chief currency is words and not pictures : we read and write, we talk and we listen. If thinking in terms of diagrams, pictures, models and real objects is going to aid understanding it is still necessary to make use of that understanding in verbal terms. In using visual methods for teaching backward children the effectiveness of this approach is limited to the final ability of the children to express their ideas as far as possible in simple words and sentences. In other words, the visual apparatus is a useful intermediary; it is a raft on which to keep afloat while other reliable means of support are being worked out in the child's mind. Visual methods supply a means of stretching the child's verbal capacity to its utmost limit as far as his intelligence allows and of using his powers of reasoning in the most effective way possible. Children of poor intelligence have indifferent powers of concentration, poor and waning interest in most school subjects, feeble memories for these, lack of means to argue in an abstract manner and to connect together the stages of an argument and to carry it forward in logical steps. The visual approach to their difficult task gives them something which can be seen and felt, is permanent in time, does not require much power of imagination and is not elusive like a mental image.

Schonell, in his notable work 'Backwardness in the Basic Subjects' gives a number of ways in which sets of pictures may be used.[1] Here are three sentences which relate to the picture which is of a type suggesting action, interest or even excitement. When the words of the sentences are arranged properly, three simple statements, related together and in their proper order, are formed.

[1] Published by Oliver and Boyd.

1. is here new a lifeboat.
2. black and white the is boat.
3. are wearing the men life-belts.

FIG. 10
From Schonell: *Backwardness in the Basic Subjects* (Oliver and Boyd).

Here is something which can be thought about carefully and slowly, and the difficulty of creating sentences to describe the pictures is eased in the early stages by giving sufficient words but not in the correct order. Subsequently, pictures are given which represent a sequence of happenings and the child has to arrange them in the proper order. (This method is also used in non-verbal intelligence tests.) Thereafter, a simple statement, in which the events are described in correct sequence, may be written by the child.

Backward children are often capable of obtaining ideas correctly but fail because they cannot translate them into words. Here simple sequences of pictures are very useful, for each one can be described in a few words, and when the pictures are placed in the correct sequence, the words can be made to combine into a sentence or sentences, thereby giving the child an opportunity to use his powers of thinking to the limit. Investigations made in H.M. Forces during the last war have shown that even with adults of average or poor intelligence, ' simple symbolic representation of factual information is not understood unless it is taught '; that is, unless a real effort, with ample practice, is made to teach the appropriate language of pictures and symbols.[1]

Stories may be told in picture form and the child is then

[1] P. E. Vernon, *British Journal of Educational Psychology*, May 1946.

asked to translate them into simple sentences, and alternatively, the story may be told verbally and the child asked to draw sequences of pictures with coloured chalks or crayons. This is of real educational value as it provides the opportunity for two-way translation and gives the child a chance to express movement from one incident to another. Backward children do better with a series of pictures than with a single picture which requires more subtle analysis. There are many good books for backward children and these are liberally illustrated with pictures which tell a story of ' real life ' interest. These concern social history and geography, scripture, ' people who work for us ' and so on. It is not sufficient for the child to look at the pictures and be interested in them. They must lead to some activity such as talking about the pictures or writing a series of sentences to describe in correct sequence what is happening. The teacher can select from such publications as *Pictorial Education*, *Picture Post*, *The Illustrated London News* and *Saturday Evening Post*, suitable material for use with children of secondary school age.

Simple projects such as mapping a part of the district will not always be beyond the capacity of backward children. A plan or model can be made of the school in the playground, the classrooms are then added and finally the trees in the playground, the school garden and the streets outside. Alternatively, backward children may collect pictures and arrange them in a reasonable order in a book, writing a short description under each. Some children who are verbally backward have a remarkable sense of colour and pictorial composition. Puppetry, which demands some skill in making the puppets, in using them with the appropriate sounds and words, and generally in ' stage management ' and production, often appeals to children who have average or less than average intelligence. Here active team work demanding the special contributions of a number of individuals is necessary. The work is purposive, progressive and can be co-ordinated with English and drama teaching. It must not be imagined that visual

methods will improve any child's *native* intelligence, but it will be obvious that a process which demands the co-ordination of the senses of sight, hearing and touch may go further and deeper than one which depends on words only.

BIBLIOGRAPHY

The Language and Mental Development of Children, Watts, Harrap.
The Evidence of our Senses, Wolters, Methuen.
The Meaning of Meaning, Ogden and Richards, Kegan Paul.
Foundations of the Theory of Signs, Morris, University of Chicago.
The Psychology of Seeing, Brandt, Philosophical Library (New York).
The Loom of Language, Bodmer, Allen and Unwin.
Principles of Gestalt Psychology, Koffka, Kegan Paul.
The Great Didactic of Comenius, Keatinge, Univ. London Press.
Signs, Language and Behaviour, Morris, Univ. Chicago Press.
An Introduction to Modern Linguistics, Palmer, Macmillan.
The Use of Diagrams in the Teaching of English, Lewis, Ginn.
Language and Society, Lewis, Nelson.
The Psychology and Teaching of Reading, Schonell, Oliver and Boyd.
The Language of Gesture, Critchley, Arnold.
An Introduction to Symbolic Logic, Langer, Allen and Unwin.
Picture English, Glover, Philip.
Children who Cannot Read, Moore, London.
The Backward Child, Burt, Univ. of London Press.
Backwardness in the Basic Subjects, Schonell, Oliver and Boyd.

CHAPTER V

THE PRINCIPLES OF OPTICAL PROJECTION

'You shall see as it were the epitome of the whole world and you shall much rejoice at it.' *Porta* (Natural Magick, 1589) describing optical images.

'Friend, beware the darkened chamber, where they twist the light for you'' *Goethe* (1810).

Lenses

WHATEVER other qualities a piece of photographic or projection apparatus possesses, first-class results cannot be obtained without good lenses. Lenses are made from glass or transparent plastics which bend or refract light passing through them. A simple lens would be made from a circular piece of glass bounded by two convex surfaces. A lens which is thicker in the middle than at the periphery is known as a positive lens, and by its use a real image can be thrown on a screen. It is not necessary for such a lens to be bounded by *two* convex surfaces, indeed, one of them may be plane or concave but the lens must be thicker in the centre than it is at the edges.

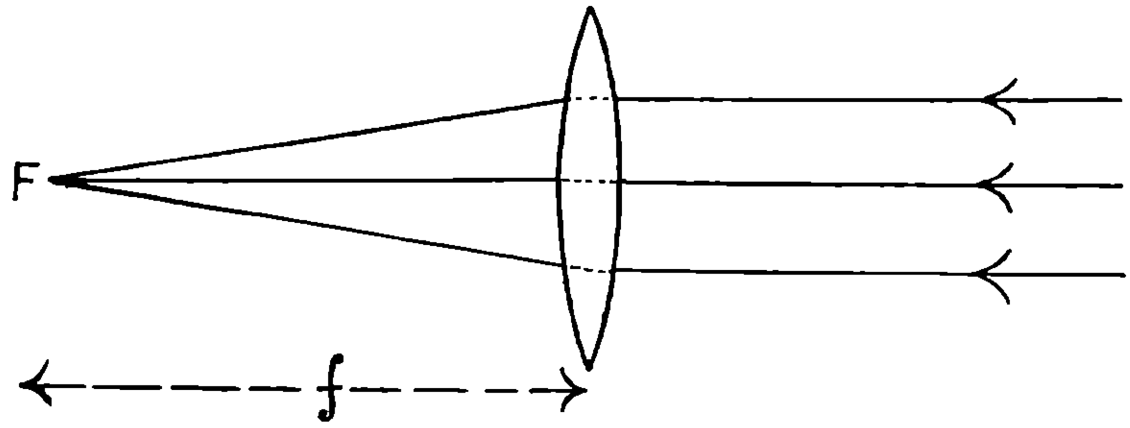

Fig. 11.

Here a beam of parallel rays of light is brought to a focus at the point F by the lens. The distance f is known as the focal length of the lens. In order to find the focal length of a simple lens it is

only necessary to measure the distance from the centre of the lens to the sharply focussed image on a white screen (e.g. a post-card) of a distant object. For the latter a tree, a telegraph pole or the frame of a window at the end of a long room will serve. Such a single lens would have grave defects for satisfactory projection work. Various aberrations are inherent in the images thrown by such a single lens bounded by partial spherical surfaces, no matter how skilfully it is made. Not only is the light bent by the refracting surfaces but white light is decomposed into colours which give an unwanted 'rainbow' fringe to the image. Moreover, owing to spherical aberration the focal length of any lens differs at different annular distances from the centre of the lens. A sharp image can only be obtained if light is permitted to pass through a small area at the centre of the lens, that is, if a small aperture or 'stop' is used. Such a small aperture would not pass enough light for ordinary projection purposes and would only be sufficient for photography on a bright day or with long exposures. Simple lenses are subject to other aberrations besides the chromatic and spherical aberrations mentioned above. Every point on an object (e.g. a lantern slide) should also appear as a point on the image and failure to do this is known as *astigmatism.* Further, a plane object such as a lantern slide should be projected as a sharply defined plane image. Failure to do this is known as *curvature of the field.* Again, an image must have exactly the same shape, that is, it must be geometrically similar to the object, and if this is not so the defect is known as *distortion.*[1]

In view of the necessity of working with apertures which are as large as possible in projection work, compound lenses are used. In such lenses several components, each a lens in itself, are mounted in a brass tube. Various curvatures are used in the

[1] These are the chief defects of lenses, but there are others such as *coma,* in which, for instance, small circles of light are drawn out and distorted both as regards distribution and focus. A simple mathematical treatment of these matters in terms of geometrical optics will be found in Volume I of *An Introduction to Applied Optics* by L. C. Martin (Pitman, London, 1930).

components of the lens; sometimes they are cemented together in pairs and others are mounted in the tube at carefully calculated distances. In order to correct for chromatic aberration a negative (concave) lens of flint glass is combined with those of ordinary optical glass. Great skill and experience combine in the making of a compound lens. It will normally be an expensive part of any optical instrument and as such it should be handled with care and respect. If such a lens is taken to pieces care should be taken to return components in the right order and in the right sense (i.e. correct direction of faces, as usually they will not be symmetrical lenses) and if distancing-rings are used these should be replaced, taking care that their threads are not crossed. Many modern lenses are sealed and the inner components cannot be removed.

SECTION OF A COMPOUND LENS USED IN PROJECTION

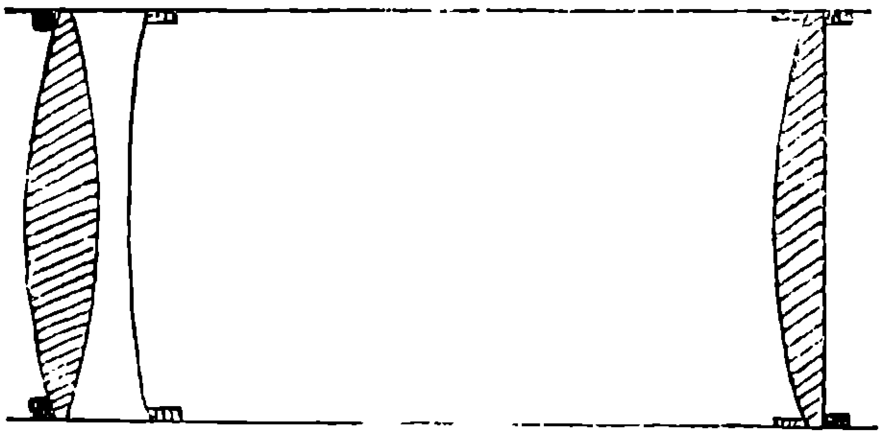

FIG. 12

Section of a compound lens used in projection. There are two convex components so shaped and arranged in the metal sleeve that the image is as free from distortions as possible. The concave component of flint glass also corrects the tendency to chromatic fringes and thus the lens is made achromatic.

It is obvious that any light which is reflected back at the surface of a lens is not transmitted and therefore is lost as far as projection or photographic work is concerned. With the many surfaces of a compound lens this is a serious matter and a large percentage of the light is lost. To remedy this many lens surfaces are now ' bloomed ' by depositing on them, by a ' sputtering ' process in a vacuum, a thin coat (about a quarter of the average wave-length of light in thickness) of a transparent fluoride. This increases by a considerable amount the light passed by the lens. Optical glass and ' bloomed ' surfaces are vulnerable to scratching. Lens sur-

faces should be protected from contact with other hard surfaces and from dust or grit. Dust may be blown from them and they should be polished, but not too frequently, with pieces of clean, dry chamois leather or silk. A good lens should be treasured as a first-class tool.[1]

For practical purposes the working aperture of a lens is given by dividing the *diameter* of the aperture into the focal length of the lens. Thus, $f/8$ means that the aperture diameter is one-eighth of the focal length of the lens.

(In compound lenses it is difficult to know the exact focal length of the lens, but failing other information we measure from the middle of the tube containing the lens).

The amount of light passed by a lens is almost equal to the square of the diameter of the aperture, that is, it is proportional to the inverse square of the aperture number, e.g. a lens at $f/8$ will pass $\frac{121}{64}$ or nearly twice as much light as a lens at $f/11$. Other things being equal, the price of a good lens in which the usual aberrations are corrected will be greater if it is to give effective results with a wide aperture i.e. a small aperture number. For cinema cameras it is possible to obtain expensive lenses in which

[1] The best bloomed surface has a purple-red appearance and has minimum powers of reflection for monochromatic light of wavelength from 4500 to 6500 Angstrom units. Water is the enemy of these fluoride films so the cleaners used should be quite dry. Where there is no blooming, or if there is a hardened magnesium fluoride surface, a soft fabric handkerchief is useful. For a softer bloomed surface a piece of soft dry chamois leather is recommended. Grit should be blown away or removed with a camel-hair brush, and oil or grease with anhydrous methylated spirit.

Projection lenses seem to suffer from bad handling more than those of other instruments. A moistened linen handkerchief should not be used as it is very easy for particles of grit to scratch and score the soft lens surface. The remarks which we have made concerning ‘ bloomed ’ lens surfaces and their preservation apply equally well for ordinary optical glass. Soap and moisture are bad for such surfaces. Sometimes it is necessary to do the best we can with badly-chipped lenses which cause bad irregularities and flare spots on the projected image. Such cavities or deep cuts in the glass surface should be filled in with black lacquer. A good piece of apparatus is a well-made instrument embodying a fundamental principle in physics and as such it should be respected and preserved.

the aperture is greater than the focal length and an *f* number of .9 is a possibility. For projection purposes *f* numbers of 3.5 to 8 are used for films and episcopes and somewhat larger numbers are used in lantern and filmstrip projectors where more light can be transmitted through the transparency.[1]

A pinhole yields a feebly illuminated image which is in focus at all distances. We say that it has infinite depth of focus. The larger we make an aperture the smaller does the depth of focus become. With a very large aperture a slight movement of the lens or the object is sufficient to throw the image out of focus. The magnification produced by a lens is given by the height or width of the image, divided by a similar dimension of the object. The intensity of illumination of the image falls off in the proportion of the inverse square of the distance of the image from the lens; and with the same lens is inversely proportional to the square of the linear magnification.

When a projection lens is selected for purchasing, it would be wise to apply the following tests. A square or rectangular pattern in black and white printed on a transparency (or in the case of an episcope a sheet of small print filling the whole available ' object ' space) should be used. The quantity of light passed at the maximum working aperture should be tested and then the image should be examined. It is easy to make a lens which will produce a satisfactory image in the centre of the field. Attention should be paid to the peripheral portions of the image. Are the black lines in focus and are they fringed with prismatic colours ? Are the right angles distorted, is the image uniformly or nearly uniformly illuminated and is it truly similar in the geometrical sense to the object ? A good lens will pass these tests.[2]

[1] See the Appendix for some simple calculations concerning focal lengths, magnifications, image and object distances.

[2] It is assumed that the object is uniformly illuminated and this will not be so if the source of illumination and condenser lenses are not working in proper relation to the optical system.

The Optical Lantern

The optical lantern is the forerunner of all other types of diascopic projection in which light is passed through a transparency and brought to a focus on a screen. The British type of lantern projects pictures on glass slides $3\frac{1}{4}$ inches square, but by changing the slide carrier the instrument can usually be made to deal with American slides ($3\frac{1}{4}$ in. × $4\frac{1}{4}$ in.) or with the French and German size (9 cm. × 12 cm.). The basic optical principle of the lantern is worth studying as it is of general application to other instruments of diascopic type. A source of light, behind which is a concave mirror, is placed in a lamp-house. Through an opening in the front of this is a condenser, consisting usually of two plano-convex lenses, which render a beam of light parallel and so distribute it evenly over the whole surface of the slide or transparency. A compound lens in a cylindrical focussing-sleeve, placed at a distance slightly greater than its focal length in front of the slide, then throws an inverted image on the screen. A table showing screen distances, focal lengths of lenses and picture widths is given on page 120. It must be remembered that the optical system must be considered as a whole and a departure from the distances and nature of each element, as they are fixed by the designer, will either prevent the instrument from working or will lower its efficiency. The position of the lamp and the mirror can usually be adjusted by the operator, and often it will be found that their positions are quite critical. Ideally the source of light should be concentrated in a very small area but the specially designed flat-filament bulbs, in which the illuminating surface is concentrated in a small rectangular plane, give good results. Care must be taken to see that the bulb is centred properly and that the filament plane is at right-angles to the optical path. It is usual to employ lamps of from 200 watts to 1000 watts capacity, with an average for large class-room use of 500 watts. The focal length of the objective or projection lens will be 6 in. for a very short throw, as in a class-room which is narrow from back to front,

and 12 in. to 20 in. for a long hall. The relation between focal length and picture size can be calculated from the data given in the section on lenses in the appendix or by reference to the table on pages 119 and 120.

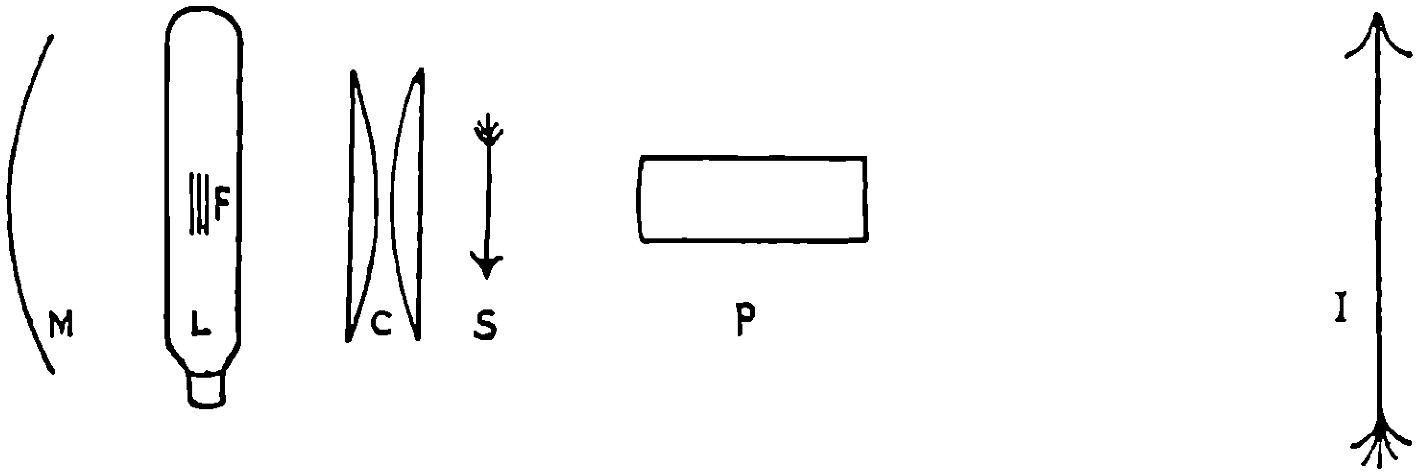

FIG. 13
The essential parts of a projector for diascopic purposes, i.e. lantern filmstrip or cinema. Heat filter which is usually placed near the condenser lens is not shown. M reflecting mirror, L lamp with flat filament at F, C double plano-convex condenser, S slide, P compound projection lens, I image on screen.

Lantern slides are usually made by photographic printing on slow positive plates, which are then masked and bound up with cover-glasses and ' passe-partout ' binding strips so that the emulsion surface is protected by the glass. The slide is numbered, titled and ' spotted ' with two white circular spots at the top of the picture when it is looked at the right way up and the ' right way round '. To put it into the slide carrier is a simple matter. If the operator stands behind the machine and facing the screen, the slide should be inverted from the normal picture position and put into the carrier. There are several kinds of carriers and two in particular are popular. The first and oldest pattern has two frames for slides and these move to and fro in another frame which is fixed by being gripped by a spring device in the instrument, in front of the condenser lenses. Care should be taken that the circle of light from the condenser is framed by the slide carrier so that a cushioned rectangle of light appears on the screen. (If there are any irregularities of illumination or patches of chromatic light

(usually dark blue) the optical system is defective and the lamp and mirror probably require small adjustments. By means of a shutter at the front of the projection lens the light from the machine can be cut off while the slides are being changed, but few operators would feel that this is worth the trouble taken in working it. In the second type the slides are fed and removed at one side only. Such a carrier will work only in a vertical or nearly vertical position.

Apart from the method of making lantern slides of direct contact from negatives of appropriate size (e.g. $2\frac{1}{4}$ in. $\times$ $3\frac{1}{4}$ in.) and masking with black paper, slides may be made by typing, drawing or printing on cellophane and sandwiching this between glass plates. Also, cover-glasses may be coated with size or a thin gelatine surface by using solutions of the respective substances. These surfaces can then be used for drawing or writing with coloured inks. Slides can also be made by using glass plates which have been coated with lamp-black or, better, thin black paint of brittle texture. The writing and drawing are then done with a metal style or blunt steel point and the slide is bound up with a cover glass to protect its surface. In an emergency it is possible to write directly on a clean glass surface with a transparent ink and use the slide without a cover glass. If lantern slides are to be tinted by hand the instructions given by the makers of the dyes should be followed. The photographic density of the slide should be a little less than for monochromatic work and the tints should be used diluted and with restraint. Nothing is more inartistic and irritating than to see what might have been a good sepia slide spoilt with garish colours.

Slides are kept vertically and the right way up in wooden boxes so that each slide is kept in position by grooves in the wooden sides. Sometimes, if lanternist and lecturer have not checked carefully each slide in its proper order in the box, a slide may be misplaced and a difficulty will be caused in a 'standard' lecture which requires that a set of slides should be used in the same fixed

order. To obviate this a white diagonal line, or two lines in the form of a < may be drawn or painted on the slide tops as they are stacked together in the right order. A missing slide, or one in a wrong position, is at once evident.

A small point which is worth attention is the desirability of having a proper lecturer's signal to tell the lanternist when to change the slides. A flash-lamp bulb, suitably mounted near the lantern, with battery, flex and a pear-shaped push-button switch for the lecturer, will save irritations arising from his repeated requests for the next slide or striking the floor with the pointer on each occasion which requires a new slide. ' Light pointers ' are available in which a small arrow of light can be thrown on the screen by a torch held in the lecturer's hand.

Various types of projection-lantern are available for the projection of scientific experiments and other material. Many physical, chemical and biological experiments can be made visible to a class by this means. The optical path is so arranged by mirrors or prisms that slides and other demonstration material can be projected from the horizontal position. An improvement on the ' Universal ' projector is Hansel's Apparatus Projector.[1] Experiments which use graduated glassware may be performed and the whole class can take readings. With a short throw of 4 ft. or 5ft. a picture of about 3 ft. width may be obtained and it is unnecessary to darken the room.

The chief advantages of the optical lantern are (*a*) the large slide area passes much light and thus a bright picture, with the possibility of daylight projection, is more easily obtained, (*b*) fine detail in the photography on the slide can be shown distinctly and small scratches are not so apparent as with transparencies of a much smaller area, (*c*) slides can be hand coloured and are large enough to permit the hand drawing of pictures and diagrams,

[1] Developed and patented by Mr. C. W. Hansel and made by Flatters and Garnett, Ltd., 309 Oxford Road, Manchester 13. Mr. Hansel has also devised a large mirror which is placed at an angle of 45 degrees above a demonstrator's head so that what is done in the demonstration can be seen by the class from viewpoints both at the front and from above.

(*d*) slides are very durable and can be preserved without apparent wear for many years, (*e*) for large halls and audiences the full-sized slide is a necessity.

Against this, slides are initially more expensive than their pictorial equivalent in filmstrips, they require considerable storage space, are easily broken, and need careful packing when they are sent through the post. The slide projection lantern is usually more bulky and less easily transportable than a filmstrip projector.

The Filmstrip Projector

The most popular device for the projection of still pictures in schools is the filmstrip projector.[1] The pictures are photographically printed as separate frames on lengths of 35 mm. film. The advantage of such projectors is their convenience; they are light in weight, can be fixed in a few moments and are not expensive. A roll of film strip weighing a fraction of an ounce will accommodate enough pictures for a long lecture or lesson. Thirty feet of film strips, containing 480 pictures, weigh 2 ounces, and pictorially they are the equivalent of half-a-hundredweight of lantern slides. With filmstrip, pictures cannot get out of order or out of position, they are cheap in cost and there is already a large and growing selection of strips for educational purposes.

Many types of filmstrip projectors are now on the market, and it is even possible to make a simple type in the school workshop at a cost little greater than that of the lenses and lamp. A good filmstrip projector should show all the fine qualities of optical projection which we have already mentioned. The lens should have a wide aperture in relation to its focal length so as to transmit the maximum amount of light, but the picture should be free from distortion, lack of focus and chromatic effects, even at the edges. The projector should be fitted with heat filters, and should not

[1] British Standard Specification No. 777 (1947) defines Filmstrip as 'a strip of flexible, transparent 35 mm. film, conforming to the requirements of Fig. 1 of B.S. 677 'Motion Picture Films' for perforations. The strip carries photographic images adopted for optical, but not cinematic projection ; the emulsion which carries the images is not mechanically protected.'

become unduly hot, even with a 250 watt lamp. (A separate fan-blower for some instruments such as the Aldis Universal model is available). Filmstrip has an unprotected emulsion surface and it is important that no damage should be sustained by it owing to a faulty design of the projector. Many commercial machines which show some fine qualities soon damage the vulnerable surfaces of filmstrips.

Filmstrips are pieces of film of the same width as cinema film (35 mm.) with double perforations and from two feet to eight or more in length. The film should be ' safety ' or non-flam film and the words ' safety-film ' should be found printed between the sprocket holes and the edge of the film. Each picture on the film is called a ' frame ' as in cinema film.

There are three sizes in use, but we need only consider the first two :—

1. The picture is 24 mm. × 36 mm., with the long side of the oblong parallel to the edge. This is the size of picture usual with a 35 mm. Leica type camera. (There is a slightly larger size based on this with picture 28 mm. × 40 mm. masked by an oblong 26.2 × 38.1 mm.).
2. 24 mm. × 18 mm., with the short side of the oblong parallel to the film edge. (1) and (2) are known as double and single frame sizes respectively.
3. A square frame, 24 mm. × 24 mm., is in use for miniature-film radiography for examination of the chest.

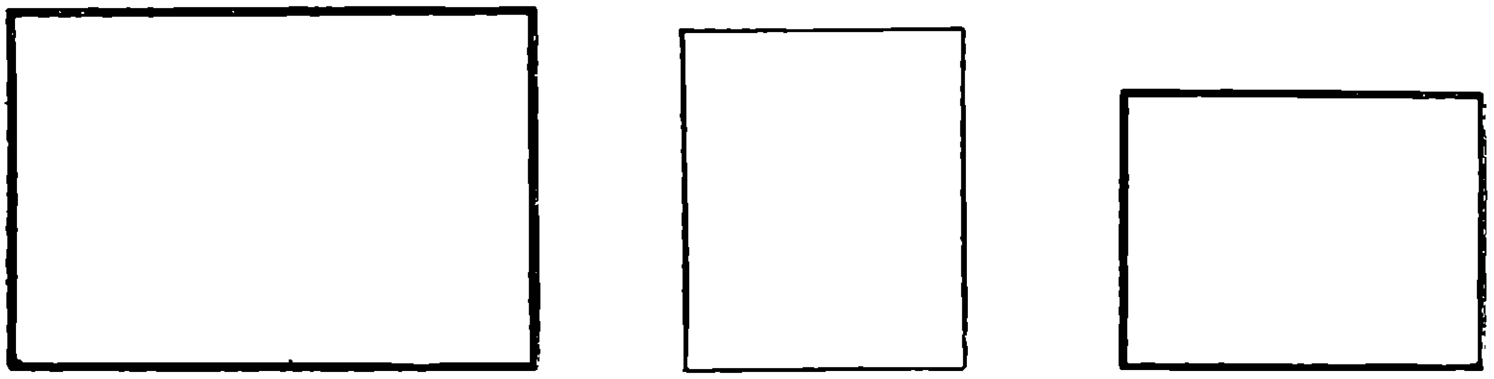

Fig. 14

Filmstrip frame sizes. Double frame (36 mm. x 24 mm.) left and single frame (24 mm. x 18 mm.) right compared in size with that of a postage stamp.

Although filmstrips are often packed in small cylindrical boxes it is usually better to use square boxes. In this case they stack and store more easily and can be readily titled and identified.

The production of a successful filmstrip is not to be thought of in terms of a series of photographs of good pictorial quality, diagrams, titles and nothing else. To be an effective tool in the hands of the teacher a filmstrip should be produced with a careful consideration of the following points.

The filmstrip should be conceived as a whole and it should be intended to fulfil a definite purpose.

It will not suffice to string together a series of pictures, however good they are in themselves, unless they stand in correct sequence to one another and build up into a logical whole. The mind must not be jerked violently from one picture to another. If possible, a new viewpoint should be gradually prepared and each picture should lead as gently as possible to the next. When a new sequence or paragraph of pictorial ideas is to appear there should be a distinct pause, and a frame containing a caption should be interposed between the two sets of pictures. Each picture should be responsible for one idea. Boldness and simplicity should be the keynotes. The centre of interest should be at or near the centre of the picture.

The lettering on a filmstrip should be large enough for it to be read easily at the back of the room. It should be of the same style throughout, and the minimum number of words, consistent with clarity of expression, should appear on each frame. If it is necessary to have more than thirty words of explanation two frames will be necessary. White letters on a black or grey background are better than black letters on a white background.

In general, large white illuminated areas quickly become tiring to the eye, and white surfaces tend to appear to be larger than black areas of exactly the same size. Moreover, white surfaces appear to spill over into black, and thus white letters on a black background look rather larger than black letters of the same

size on a white ground. Filmstrip makers and artists producing pictorial material for photography into filmstrip negatives would do well to use neutral grey as their background. Many shades of grey paper can be purchased and some have a most pleasing texture which photographs well with oblique illumination and gives a very satisfactory result on projection. Indian ink, black or dark grey paints and various shades of white can then be used and give a large range of monochromatic possibilities with the restful grey as a background. Diagrams made with Indian ink on white paper do not make pleasing filmstrips. They photograph as thin, black lines which do not stand out and are very fatiguing to the eye. The diagrams should be drawn with patches of white, grey and black, all carefully graduated. Some workers find the 8 in. × 10 in. original too large and in order to force themselves into a bolder treatment make their original diagrams on surfaces no larger than postcards. This has the disadvantage that any small defects suffer considerable magnification on the screen and are the more apparent.

Photographs which are used for filmstrip purposes should be taken from glossy prints of a size not greater than 12 in. × 9 in. Retouching with white, grey or black retouching medium may be necessary to remove unnecessary detail or to emphasise particular features. Most pictures and diagrams contain too much detail for effective filmstrip purposes. Normally, each frame should illustrate one idea and nothing should be permitted to distract the mind from this. Pictures photographed from half-tone illustrations are not often satisfactory. Apart from the fact that the ' dots ' can be seen, they usually lack contrast and definition. Occasionally, however, half-tone pictures on good art paper may be retouched by a skilful worker and so made to give reasonable results. Although some useful filmstrips have been made by taking selections of pictures from a school collection this is not to be recommended. The filmstrip should be designed as a whole to fulfil a specific teaching purpose and accordingly the pictures, or most of them, will be specially prepared.

If it is desired to have a filmstrip made by a commercial firm from photographs and diagrams prepared by the teacher, it will be convenient if they are supplied in a uniform size such as 8 in. × 10 in. or 9 in. × 12 in. At first sight it might appear that a filmstrip could be easily made by printing pictures on 'positive' film by direct contact from negatives taken in a Leica camera. Even supposing that we have taken the photographs of the original pictorial and caption material in the correct order, there is usually a problem arising from the different density and contrast of each picture. Many workers print single frame positives, mount them, and use them as miniature slides. Usually it is better to enlarge from the 35 mm. negative, obtain positives of at least postcard size and use these, after careful inspection, as the starting point for making filmstrip. In the same way colour-films made in Leica type cameras can rarely be used *in toto* as filmstrips. Only good frames should be selected and mounted to make miniature slides. Kodachrome or other systems, where only the dyes compose the picture, are better for projection work than colour processes where a screen or 'réseau' is incorporated in the film, for even at its best a large proportion of light falling on the latter type of film is not transmitted through it. Teachers should be encouraged to select material for their own filmstrips. Commercial examples will sometimes meet their requirements, but few teachers will wish to sink their personalities in a filmstrip and book of notes made by another. Many poor examples of filmstrips are still advertised and more consideration should be given by teachers to the appraisal of strips. The teacher should try to judge the filmstrips which may be useful for his purpose by keeping in mind the following points :

1. Do the pictures follow one another in logical order ? (If the pictures, or some of them, are suitable in spite of an unsatisfactory order, they may still be cut from the strip and used as miniature slides).
2. Is the strip too long ? Are the breaks in the sequences of ideas properly contrived ?

3. Are the pictures and diagrams free from irrelevant detail ?
4. Is the strip suitable in content and treatment for pupils of a particular age and intelligence level ?
5. Are the photographs simple and direct so that they will build on the child's existing experience and ideas ? Many photographs which are technically good have been taken from unusual angles or with unnatural lighting.

These are points which should appeal to the teacher, but there are others which must be taken into account. A high technical quality is necessary but such perfection does not necessarily imply that the filmstrip is an ideal teaching aid.

Here are some technical considerations :—

1. Are all the ' frames ' (pictures or diagrams) the same size ?
2. Are they placed in the centre of the strip at regular intervals ?
3. Is the smallest lettering on the strip clearly visible from behind the projector when shown on the screen ?
4. Is the lettering well away from the edge, so there is no danger of it being partly hidden by the mask ?
5. Are the pictures numbered to make reference easy ?
6. Are the pictures taken from photographic prints, or from half-tone book illustrations, which show ' dots ' ?
7. Are they of even density, or are some dark, some bright and some weak-looking ?
8. Is the lettering in the same style throughout ?
9. Are the diagrams drawn in patches of grey and black, in well-chosen shades, or in thin black lines which, with bright areas of light at each side, are tiring to look at ?
10. If symbols, such as arrows are used, are they consistent throughout the length of the strip ?
11. Is the general effect one of artistic neatness, clarity and unity ?[1]

Commercial filmstrips can be made quite cheaply : the names of a number of firms undertaking this work are given at the end of

[1] These factors for filmstrip appraisal have been given by Miss Winstanley, the Director of the Derbyshire School Museum Service.

this book. When many copies of a filmstrip are made they can be reeled off at a rate of 60 feet per minute on film costing about a penny per foot.

When a filmstrip projector is to be purchased it will be wise to observe the following factors :

1. The optical system of the projector should produce a distortionless image and there should be no sign of chromatic fringes in the image. The lens should be capable of working with a wide aperture in order to pass as much light as possible. A heat filter should be incorporated with the condenser system.
2. Ventilation should be so good that the instrument does not become unduly hot even if it is run continuously for more than an hour with a 250 watt lamp. (Some of the larger instruments have an electric fan and can be used with lamps up to 1,000 watts consumption).
3. The ' gate ' and sprocket mechanism should be so arranged that each frame of film comes into position easily and remains in focus. Moreover, as the emulsion surfaces of filmstrips are unprotected it is important that the machine should not scratch or otherwise damage the film surface.
4. The machine should be capable of dealing with both single- and double-frame filmstrips, and of quick adaptation for use with miniature slides or for other means of projection. (Filmstrip projectors have been adapted for micro-projection and also for the demonstration of scientific experiments devised in small size, e.g. experiments with electromagnetic solenoids.)
5. The projector should be so made that it may readily be dismantled for cleaning. The threading of the filmstrip should be an easy matter.

Some filmstrip projectors have an alternating current transformer in the base so that mains current of 200—250 volts. can be

reduced to a more efficient[1] voltage for the projection lamp, without the loss of much energy. Such instruments should not be connected to D.C. mains with the transformer in circuit. An adjustable plug is usually supplied with such projectors, and if it is required to use them with direct current the transformer can be cut out and the projection lamp will then require to have a voltage-rating equal to that of the mains.

The Use of Filmstrip Projectors

As the surface of each picture is both small and vulnerable it is particularly necessary that the projector should be kept clean and that the strips should be preserved in boxes free from dust and grit. The film in the projector is held between two glass plates which are kept together by means of springs. Dirt and gritty dust will both scratch the glass and score the film surface.

Filmstrip projectors should have rotatable film-carrying mechanism and lenses. As double-frame pictures are printed with the long side of their oblong parallel to the length of the film, and single-frame pictures are at right-angles to this, it is not possible to change from one type of strip to another by merely altering the metal framing mask, but it is also necessary to turn the film through a right-angle. Most modern filmstrip projectors have a take-up film chamber in the form of a small cylinder with a slit in it. Unless the strip is a very long one the film should rewind itself by coiling round the internal walls of the cylinder and then collecting in circles of slightly decreasing radius. Film strips should have a reasonable length of ' leader ' both before and after the pictures ; they should be clearly marked with their numbers and title and with *start* and *end* in bold letters. If the filmstrip has to be rewound between finger and thumb care should be taken to touch it only at the edges. Filmstrips can be cleaned in the same way as ordinary ' non-flam ' 16 mm. cinema films.

[1] Projection lamps with thick filaments working from 18 to 30 volts are most efficient.

It is possible to obtain useful results, if a picture not larger than 2 ft. 6 in. to 3 ft. in width is required, by using an efficient low-voltage bulb and car batteries. For ordinary large classroom use, the normal rating of the projection bulb will be from 100 watts minimum to 250 watts or more, and for powers greater than 100 watts it is necessary to use a heat filter in the optical path.

Filmstrip projectors may cost from £15 to £50 or even more. It is possible to make a filmstrip projector for a cost a little greater than that of the lamp-mounting and optical system (mirror, condensers, filter for heat and projection lens).[1] Those with some interest in handicraft, having taken note of the optical system which must be regarded as an integral whole, will be able to devise their own plans for such an instrument.

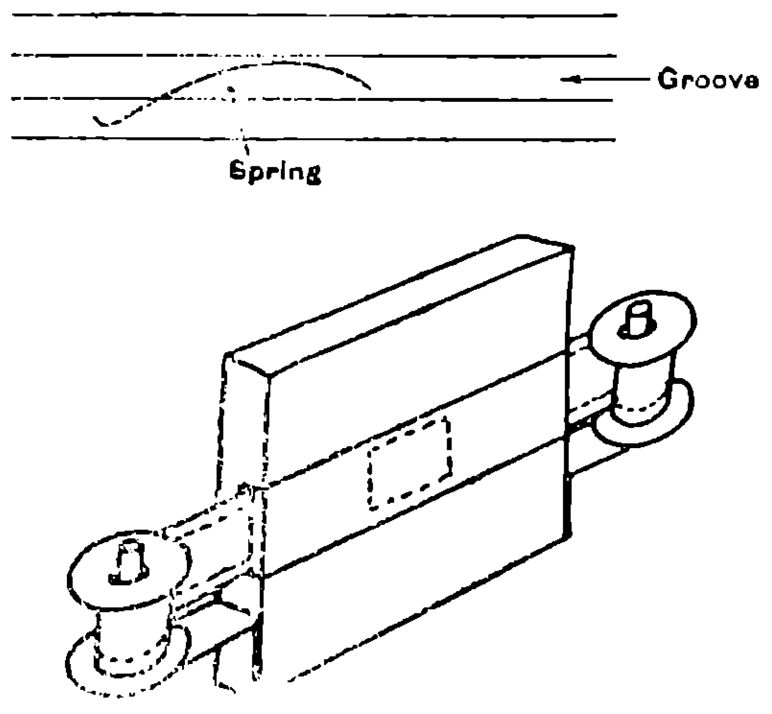

FIG. 15

It is possible to make a simple adaptor (Fig. 15) so that filmstrips may be projected with an ordinary optical lantern. As only a tiny fraction of the available condenser area will be taken up by the filmstrip frame the picture so projected will be very small or, if a long throw can be arranged, it will probably not be well illuminated. If the source of light is increased it may be found that an intensity which will not damage glass-plated lantern-slides will buckle and even damage filmstrip.[2]

It remains to be said that there are some valuable features of filmstrip which have not yet been fully exploited. A good oper-

[1] Sets may be obtained from the British Optical Lens Co., 315 Summer Lane, Birmingham 19. Price from 92s. to 110s.

[2] Education Pamphlet No. 115, Optical Aids, H.M.S.O.

ator is able to pass filmstrips through a projector at a considerable speed without damaging them. When the frames are projected so that each remains in the gate a second or two only, the filmstrip is then halfway to the cinema film, particularly if the light can be screened off by a simple rotating shutter while the changes from one picture to another are being made. It should be possible to make more filmstrips to show a process in operation, an evolution, or slight changes from frame to frame. These would be invaluable in the teaching of geometry, mechanics, engineering, biology and many other subjects, and would be immeasurably cheaper than making slow-motion cinema-film animated diagrams. The filmstrip method has its limitations but there can be no doubt that it could become a powerful demonstration method for showing such things as motion analysed, biological growth and development, the working of engines and machines, the building up of geometrical diagrams by the movement and addition of lines, and so on.[1]

[1] Since this was written a significant article by Curt A. Laurentzch has appeared in the Penguin Film Review, No. 8, 1949, in which this idea is extended. In making a plea for the production of more artistic filmstrips the author suggests that the aesthetic laws which govern the Bayeux Tapestry might well be studied. 'As we follow their picture-stories we feel at the same time how the artist worked for climax and anti-climax in colour or tone harmonies, for parallel and contrasting movements and subtle direction. The author suggests that ' leaving aside the probably controversial nature of Gestalt psychology, it must be recognised that most of its principles have a strong appeal to the artist, especially when working in education. Formulations like symmetry, balance, proportion and rhythm, which in Gestalt psychology attain such an importance, are the very elements of his own work.

'Perfection tends towards balance and symmetry, or, differently expressed, balance and symmetry are perceptual characteristics of the visual world which will be realised whenever external conditions allow it : when they do not, unbalance and lack of symmetry will be experienced as a characteristic of the whole field, together with a felt urge towards better balance,'

H. J. Eysenck, Quoted by Herbert Read in *Education Through Art.*

' It should not be forgotten that the sometimes used expression ' still strips ' tends to fog the possibilities which are given by the movement from frame to frame during projection. It must be said, however, that the projectors available at present do not help much in this respect. The lack of a shutter-gate which blacks out the screen during frame change makes it impossible to take into account for instance, the effects of persistence of vision. As things are now we cannot even speak of a cut in the accepted movie sense. The visible change of

Miniature Slides

There are certain disadvantages in the use of filmstrips. It cannot be pretended that the pictorial quality of filmstrip reproduction, good as it is, is yet quite as good as that of a lantern slide at its best. Filmstrip scratches easily, it is easily marked of handling and requires great care in cleaning. The sequence in pictures is fixed when the strip is made and there is thus a tendency to produce a stereotyped lesson or lecture by its use, although this ought not to be the case. Although it is possible to ' retrace one's steps ' in a filmstrip by turning back, this is not a good method as it demands a good deal of turning and a waste of time. Black-and-white and coloured pictures cannot be used together on the same film-strip. Sometimes filmstrips are made so that some of the frames have their pictures at right angles to the others. The necessity of rotating the projector head is irritating both to operator and audience.

Many teachers prefer miniature slides which can be made by enclosing transparencies of the double-frame size (36 mm. × 24 mm.) between two glass plates, masking the picture and binding with tape. An easier but more expensive method is to mount the film in the commercial metal 2 in. × 2 in. slides. The film frames can be filed between paper folders, with titles and details written on this, and stored in envelopes in a small filing drawer until they are required. They can be handled by holding them at the corner with a flat-bladed pair of small spring forceps. Most types of filmstrip projector have a simple adaptor for the use of miniature slides, which can be prepared as required if a sufficient number of metal holders is available. Miniature slide projectors are now available which can be loaded with a

frame, which is aggravated when the mechanism becomes worn, presents a most awkward problem, for artist, teaching projectionist and student alike. With the shutter-gate a proper cut could be effected and, considering persistence of vision, even a ' mix ' could be obtained. Given a certain design of strong contrasts, projected in a fairly dark room, the shape of it will be kept on the retina and carried over into the next picture. This, of course, calls for very careful planning of design from frame to frame.'

stack of miniature slides in the correct order. The slides can be changed by the teacher or lecturer himself by remote control (using a push button and cable). For demonstration purposes the projector may be used with a gramophone and special ' commentary ' records which, acting through an electrical relay, will change the slides at the appropriate moments.

(Sometimes miniature slides are made with frames of 40 mm. × 28 mm., which is the size of picture in Bantam type cameras. The film used in such instruments is 35 mm. in width but it has sprocket holes on one side only.)

Some workers prefer to have their pictures on very short lengths of film each of which takes four to six frames. The strip of film can be bound between glass plates, or alternatively it may be filed in stout paper folders and placed between hinged glass covers when required for projection. Such small sets of miniature pictures, which resemble the oblong slides of the toy magic lantern of the early years of the century, were introduced in 1935 by H. R. and I. W. Dance.

(The teacher who works with slides of any type will do well to learn how to cut glass with a diamond or wheel-cutter against a straight edge. Old ' quarter ' plates from which the emulsion has been stripped by a lengthy soaking in hot water can be cut down to make mounting and cover-glasses.)

The Episcope

The episcope projects opaque pictures and other objects by using light reflected from their surfaces when they are brightly illuminated. It is sometimes known as *the Opaque Projector*, *the Delineascope*, *Baloptican* or *Reflectoscope*. (An *Epidiascope* is a composite instrument which will project both opaque objects and transparencies such as lantern slides.)

Fundamental Principles of Episcopy

The obvious advantage that the episcope will project pictures, book illustrations and postcards, without the necessity of pre-

paring transparencies by photographic methods, is offset by a number of qualifying factors. Poor episcopy is such a bad method of giving visual illustrations that a few general principles, which should guide the demonstrator, ought to be observed. Much less light is reflected from a surface, such as that of a photograph or book illustration, than is transmitted by a transparency such as a lantern slide. Thus the best possible use should be made of the light reflected from the picture or object. In the episcope we need therefore :

(*a*) A powerful illuminant, which for ordinary purposes should not be less than 500 watts.

(*b*) A wide aperture lens, which will be expensive if it is to produce a distortionless image over the whole field.

(*c*) A good screen. A beaded screen is preferable if seating arrangements permit, as it increases contrast in the image.

(*d*) A good black-out.

In view of the considerable consumption of electricity by the large bulb required for successful episcopy, large quantities of heat are generated, and therefore the cooling of the machine becomes a problem. Some of the more elaborate models are fitted with small electric fans which will dispose of the heated air. A number of English instruments are built with large black bodies so that there is considerable radiating surface, and natural convection ventilation is also provided for. Wherever there is light in a projector there is heat, and the picture to be projected is usually pressed against a sheet of glass at the bottom of the episcope.[1] A further section concerning lenses is given later in this book but it will suffice to say now that the amount of light passed by a lens varies with the square of its working aperture. The expense and difficulties of making wide aperture lenses vary out of all proportion to the increased diameter of the lenses, if they are to be free from

[1] In a small machine made by the writer twenty years ago for laboratory work the cooling was effected by coils of blackened copper tubing which were placed inside the case of the episcope out of the optical path. Cold water was passed through the tubing by a rubber attachment to the tap.

the various aberrations which cause distortions to the picture. (See page 214).

Purchasers of an episcope or episcope lens should test the instrument before buying, unless they are assured that the instrument is hall-marked as a first-class product. A sheet of printed matter filling the whole available object space should be projected and the peripheries of the image should be inspected for distortion, coma, spherical aberration, loss of contrast. This is an ' acid test ', for a picture where the interest is concentrated in the middle will often appear to be satisfactory, particularly if the background is neutral, hazy or dark, whereas a page of print or a geometrical pattern of squares in black-and-white will at once reveal major defects if they are present. An attempt to make an episcope, which will be more than a toy, for the projection of objects of postcard-size and larger will hardly be successful with lenses of less than 2 in. aperture. Good commercial episcopes or epidiascopes have lenses of 4 in.—5½ in. aperture. Even with fairly expensive instruments it would be unwise to expect quite the same perfection in the projected image over the whole field as can be obtained by using the relatively smaller aperture lenses of a good projection-lantern or filmstrip projector.

Episcope images, though usually adequate or more than adequate in size, tend to be ' flat ' and uninteresting compared with those which are produced by diascopy. A good screen which will tend to increase contrast and a well-darkened room are desirable. Even such contrast as is apparent near to the screen tends to fall off when the image is viewed from the rear of the room. Not all pictures and illustrations are suitable for episcopic projection. Newspaper pictures and poor half-tone reproductions are usually quite unsuitable. Bold outlines and colours on good quality smooth or glossy-white paper make suitable material. If the picture were projected by episcopy without the use of a reversing mirror it would appear the ' wrong way round ' on the screen. It is just as important that pictures should appear in the right

sense as it is for prints and maps. The mirror of the episcope, which conveniently turns the projected beams from a vertical to a horizontal direction, also gives the image its correct orientation.

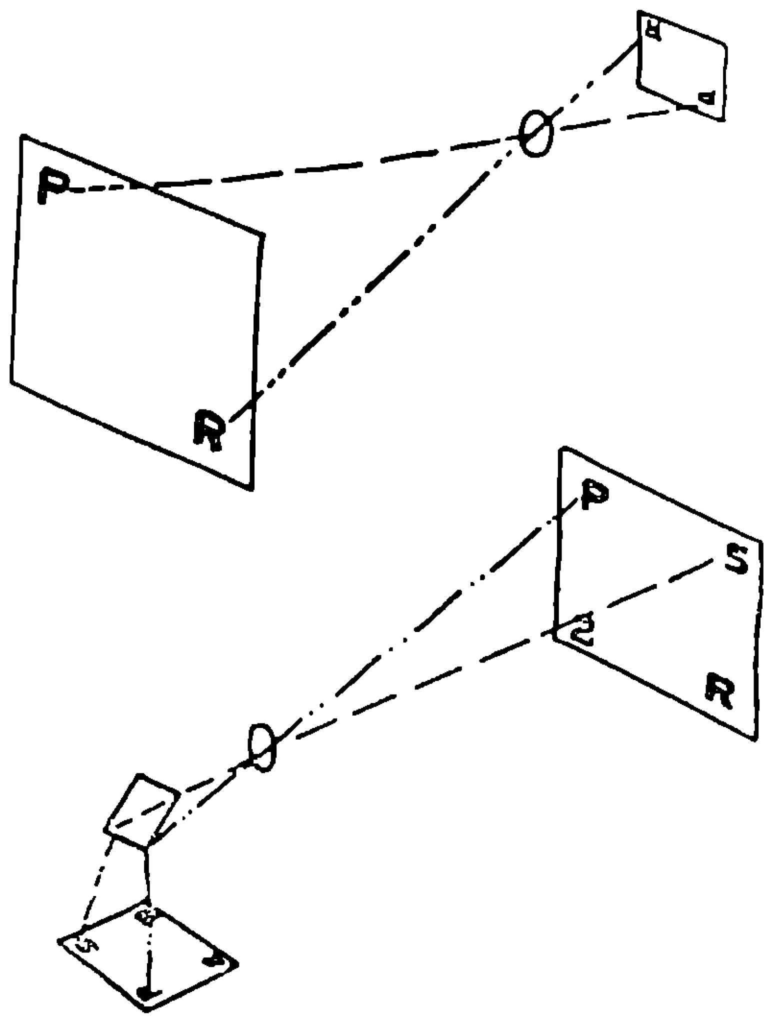

FIG. 16
The action of the mirror at 45° in the episcope. (From *Optical Aids*, B. of E. Pamphlet No. 115.)

A difficulty in using episcopes is that usually the platform holding the material for projection has to be lowered whenever a picture is changed, and sometimes a flood of light dazzles the sensitive eyes of a viewer near the instrument. This can partially be obviated by placing the instrument on a large table with a dead-black surface, or by hanging round it, at a suitable distance, black material which will take up the light. With a little practice an operator will learn how to place, from one side or another, awkward material, such as bookplates in thick books of various sizes, in the instrument quickly and accurately. Episcopes have been

designed so that simple experiments can be done at the platform level and thus projected. The operator's wrists are covered by a black curtain hanging round the base of the instrument, and he can see what he is doing through a small circular ' squint ' of dark glass in the side of the instrument. Biological specimens may also be shown, but care must be taken to ensure that they are not seriously affected by the inevitable heat. Jewellery, coins, fabrics and flat museum specimens often make excellent material for episcopy. In view of the fact that many episcopes do not project objects or pictures greater than 6 in. to 8 in. square in size, some models (e.g. the large Ross instrument) have a device whereby the body is mounted on rails so that the whole of a large book-page can be scanned by slowly moving the body of the instrument. Small episcopes, which project pictures mounted vertically at the back of the instrument, are suitable for direct use with rear-projection translucent screens.

An epidiascope, if true to its name, is really a combination of an episcope and a diascope (' magic ' lantern). This has a possible disadvantage that the two instruments are tied together and their separate use in different rooms by two teachers at the same time is impossible. A change from episcopy to diascopy can be made by moving a lever which alters the direction of the light beam and may move one or more mirrors, according to the type of instrument. The projection systems for opaque and transparent objects are different and require separate lens systems. Some types of instrument are so made that optical systems and the attendant specimen, slide, or filmstrip mountings can be fixed as required to the lantern body. Thus, the epidiascope can also be used for projecting micro-slides, standard-slides, miniature slides and filmstrips.

The chief advantage of episcopy is that there is a great wealth of material of possible value for projection without the necessity of making slides and filmstrips by photographic processes. When suitable pictorial material has been found it may be mounted on

black paper and filed. If a series of pictures, which are always to be used in the same order, are to be projected, a useful method is to mount the pictures on a length of black paper, which is then folded in concertina fashion so that when a fold is pulled out another picture is exposed. If this is used in the episcope, the troublesome business of correctly positioning the picture, which causes difficulty to the inexpert episcope-projectionist, is then obviated, as are also the irritating pauses and glares of intense light between one picture and the next. Where separate pictures of different sizes are to be projected, it is often helpful to have two pieces of black paper in the shape of an L so that the picture, whatever its size, can be framed and positioned in the instrument.

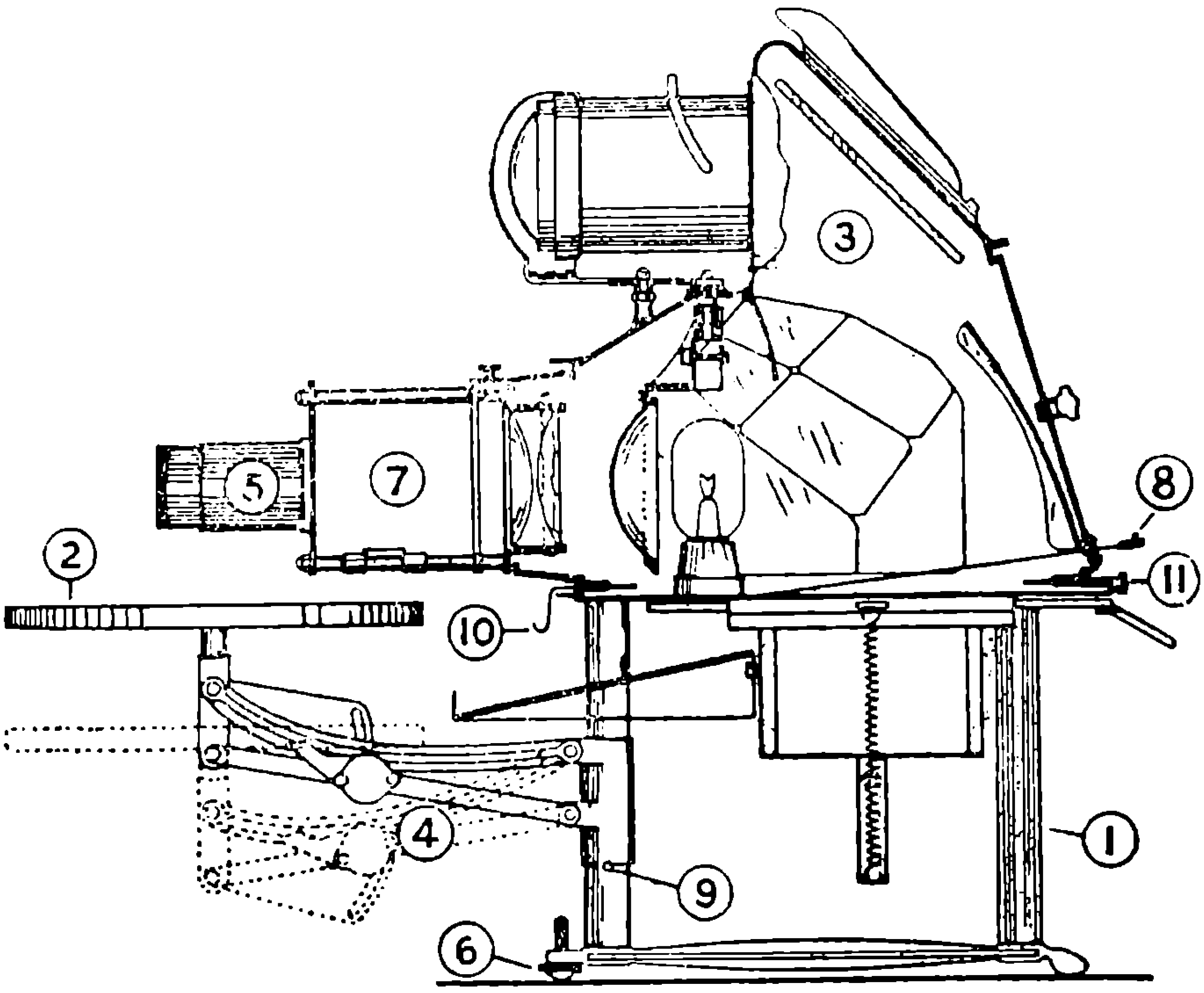

FIG. 17

SECTION THROUGH THE ALDIS EPIDIASCOPE

1 Legs, 2 Supporting table, 3 Main body, 4 Table elevating gear, 5 Lantern projection lens, 6 Elevating screws, 7 Lantern attachment with panel, 8 Pointer, 9 Table supporting bar, 10 Curtain hooks, 11 Central terminal screw.

There are a number of fine English and American epidiascopes on the market. We take the Aldis instrument as an example. It has a very large aperture lens and the light from a 500-watt lamp is concentrated by fourteen mirrors on the object. The field which is 9½ in. diameter is unusually large. The instrument is so mounted that comparatively large objects such as a 9 in. globe can be shown. Specimens can be handled and experiments performed in the illuminated field. The instrument is equipped with a *diagram-changer* whereby up to 40 metal sheaths may be loaded with pictures before the lesson, and are then projected in the right order and in focus by moving a handle which ejects them one by one. This is a great advantage for reasons which have already been indicated. By means of the sub-illuminator an area of 8¼ in. diameter is illuminated evenly from below so that large objects can be shown either as transparencies or silhouettes. Demonstrations such as those showing magnetic lines of forces (magnets and iron filings) can be done by this method.[1]

This is an expensive but very worthy and versatile instrument which will give many years of service. Nevertheless, there are cheaper instruments which in a limited way will give satisfactory results.

It is possible to make a useful demonstration episcope in the workshop.[2] First, it is necessary to consider the best large aperture lens which is available, and then design the body of the instrument accordingly. On the opposite page is the elevation of an instrument made for the writer in a school workshop.

The lens had an aperture of 3 in., its focal length was 8 in. and it was bought mounted in a focusing-sleeve, with a flange for attachment to the body of the instrument. The body of the machine was made from thin sheet iron riveted together, with

[1] The firm has recently produced a smaller, more portable but very versatile episcope known as the Epivisor.

[2] Another design may be obtained from the Public Relations Department, Ministry of Education. Special lenses for the home or school manufacture of episcopes and filmstrip projectors may be obtained from The British Optical Lens Co., 315 Summer Lane, Birmingham, 19.

suitable holes cut at the top to receive the lens and for ventilation. Over the ventilation holes, further strips of sheet metal were fixed and so arranged that air could get out but not light. Further sets of holes were bored at the sides of the instrument for ventilation purposes. Before the lens was bolted to the top of the body the sheet iron was blackened inside and out with dull black enamel and 'stoved' in order to dry it thoroughly. The bottom of the instrument was virtually a piece of glass, sliding into racks at the sides.

An external platform made of wood but faced with metal and black baize was hinged at the sides by means of spring hinges so that the thickness of a book could be taken up, and the page required for projection could still lie flat against the glass. The light was given by four 100-watt bulbs with ordinary brass lampholders screwed into inch holes, two on each side of the instrument at the top. Each lamp was provided with a polished semicylindrical tin reflector lying against the bend in the top of the

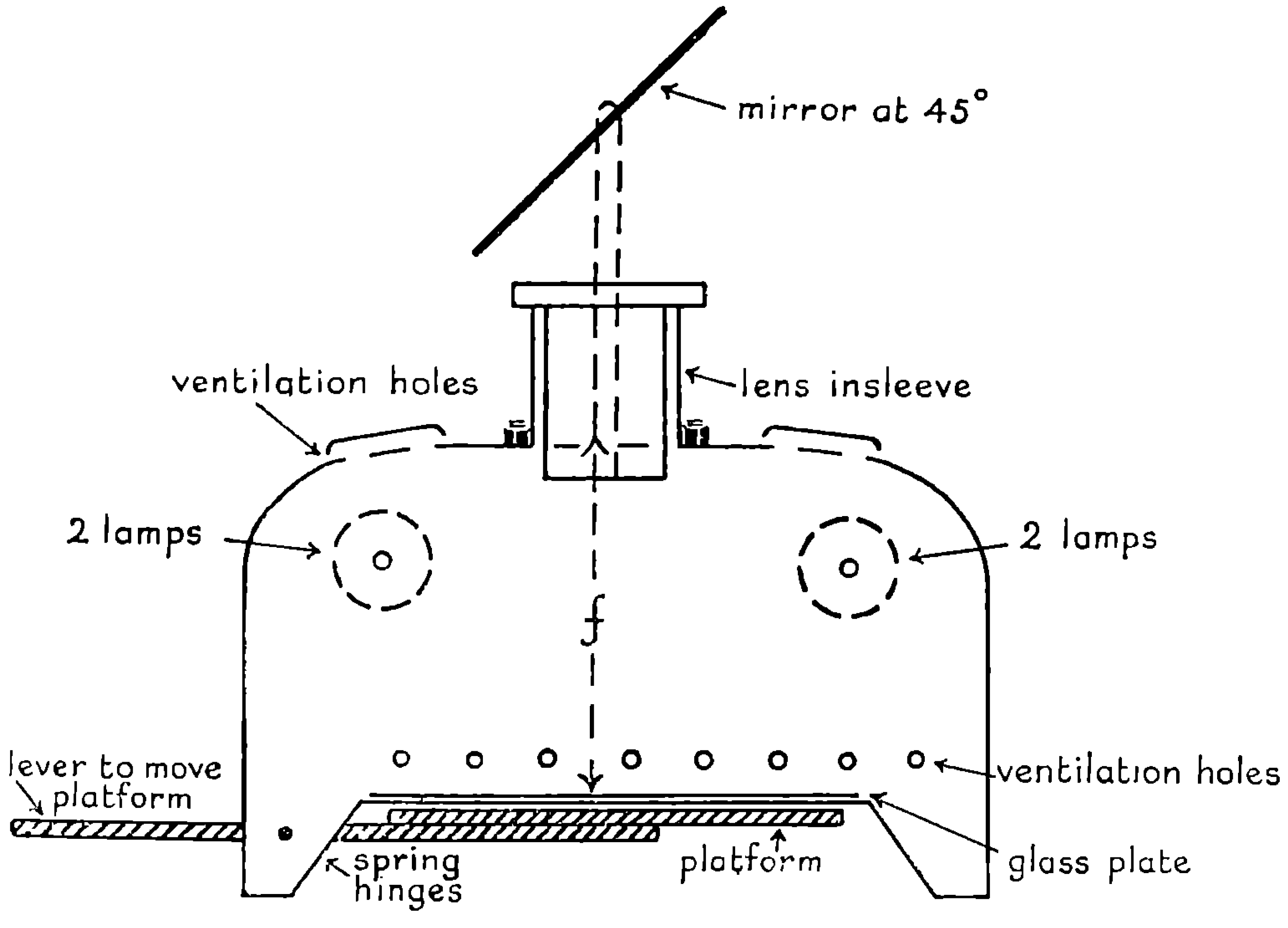

FIG. 18.

body. An external mirror was placed at an angle of 45 degrees to the horizontal in a simple metal stand which stood on the top of the instrument. Although ideally this should have been silvered on its front surface, results were quite good with a piece of ordinary 'looking glass' mirror. This bent the light forward and caused the projected image to appear the 'right way round'. No further details are given because there are many ways of designing and making an episcope and these will always be determined by the type of lens available. The height of the body from the plane of the object to the middle of the lens, when it is pushed in its sleeve to its lowest position, should be about equal to its focal length. It is focused by moving it outward: the less the distance to the screen the more will be the distance which the lens is moved away from the picture or object.

The Microprojector

The earliest microprojectors were attachments to fit in front of the condenser of a standard lantern. Great heat was generated by the electric-arc or limelight and elaborate arrangements were necessary for cooling. Althought attachments to existing lanterns, filmstrip projectors and epidiascopes will give low-power magnification, a specially designed separate instrument is required for most purposes. Even so, the most elaborate microprojectors will not give the degree of magnification with good definition which is obtainable by using a good microscope in the ordinary way. Generally, an objective of higher power is necessary with the microprojector than is needed to see the same object with a well-adjusted microscope. For instance, root-tip chromosomes can be seen with a 1/6 in. objective on the microscope but require for good projection a 1/12 in. oil immersion lens.

The instrument here illustrated is the Flatters and Garnett No. 1 Microprojector.[1] All powers of objective including 1/12 in.

[1] Designed by J. B. Garnett and obtainable from Flatters and Garnett, Ltd., 309 Oxford Road, Manchester, 13. See opposite page 128.

oil immersion, can be used, giving brilliant results on a good screen in a darkened room with a picture up to 4 or 5 feet in diameter. With lower powers of objective up to $\frac{1}{2}$ in. complete darkening is unnecessary, while projection on to the table using the first surface aluminised mirror, is possible even in daylight. By the use of an easily removable cooling trough, living specimens may be safely projected for long periods, thus enabling many interesting details of pond life e.g. hydra, its movements, feeding and reproduction to be observed. Polarising attachments are available for demonstrating rock and crystal structure by polarised light. Further, the object to be projected may be placed in either a horizontal or vertical position so that specimens in glass dishes may be demonstrated. Attachments are provided so that optical experiments may be shown using lens holders, prism table, optical slit, etc. These fit to the optical bar in place of the microscope body and stage.

The chief advantage of the microprojector is that all members of the class see the same specimen and see exactly what the teacher wishes that they shall see. This is particularly valuable in a secondary modern school or in the lower forms of a grammar school. It is practically impossible to be certain that younger pupils using an ordinary microscope observe details which cannot directly be pointed out to them. Again, if only one or two microscopes are available a difficult or impossible situation arises if children have to queue to look, in turn, in the instrument. Real teaching in the use of a microscope is necessary, and this may be neither appropriate nor expedient in the large classes of secondary modern schools and in the lower forms of grammar schools.

Further advantages of the instrument mentioned above are: a completely dark room is not necessary except for high powers; and many types of small transparent objects can be projected without the risk of heat damage. Such specimens will include living ‘pond-life’, polariscope objects, chromosomes in living cells, histological structure of tissues, bacteria, etc.

The projector can be used for drawing microscopical objects and for making full-scale diagrams by first projecting an image on a sheet of drawing paper. The condenser and objectives are of standard dimensions so that existing microscope attachments may be used. The microprojector is a fairly expensive instrument and it should be kept free from dust and carefully preserved when it is not in use.

The chief disadvantage of the microprojector is that it is not satisfactory for extremely high powers, and moreover the considerable heat, which arises from the great concentration of light necessary under these circumstances, is sufficient to damage some small and delicate organic specimens. Again, the microprojector must never be allowed to stand in the place of individual work with microscopes by sixth form and university students. Here real training in the use of the ordinary microscope and the techniques of preparing specimens for observation is of prime importance, and it may be mentioned in passing that although the latter is reasonably well done the former is almost entirely neglected. Nevertheless, even in the sixth forms and university the microprojector will give quick demonstrations which are useful in lessons and lectures.

We have already noted that lower powers of magnification can be obtained by microprojector attachments to existing projection apparatus. It is also possible to use an ordinary microscope for projection purposes by providing, as a separate unit, a small lamphouse, with condenser and spring clips to hold the slide, the whole being carried on a stand so that it is adjustable for height and direction. This arrangement is particularly suitable to give rear projection on a translucent screen of 18 in. width. Such a device is obtainable in the Pearson microprojector. (This apparatus can be made in the school workshop by using a small tobacco-tin with powerful motor head-light bulb as lamphouse and lamp respectively. The 'super' condenser found in an 8 mm. or 9.5 mm. cine projector can be used as a condenser. It is convenient

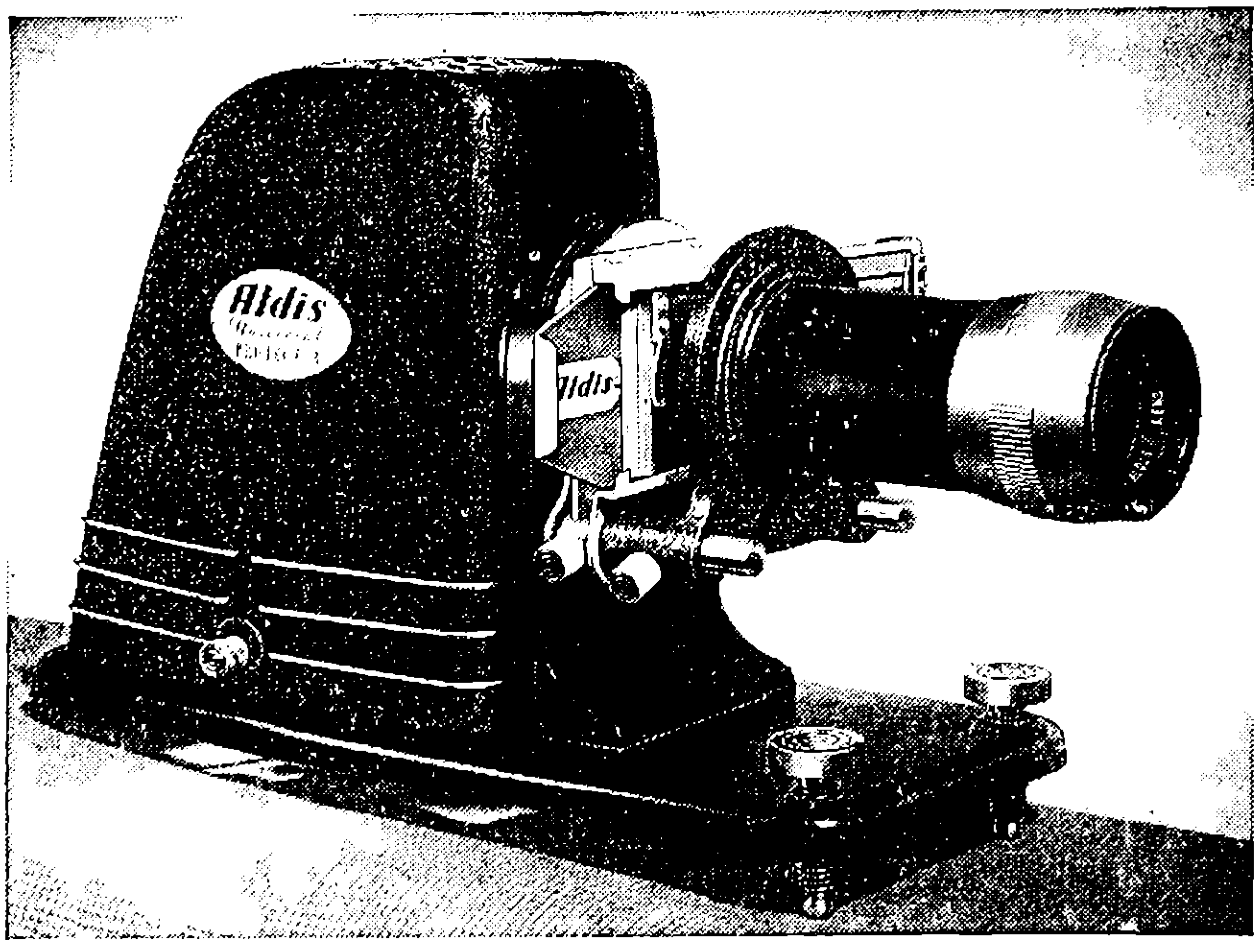

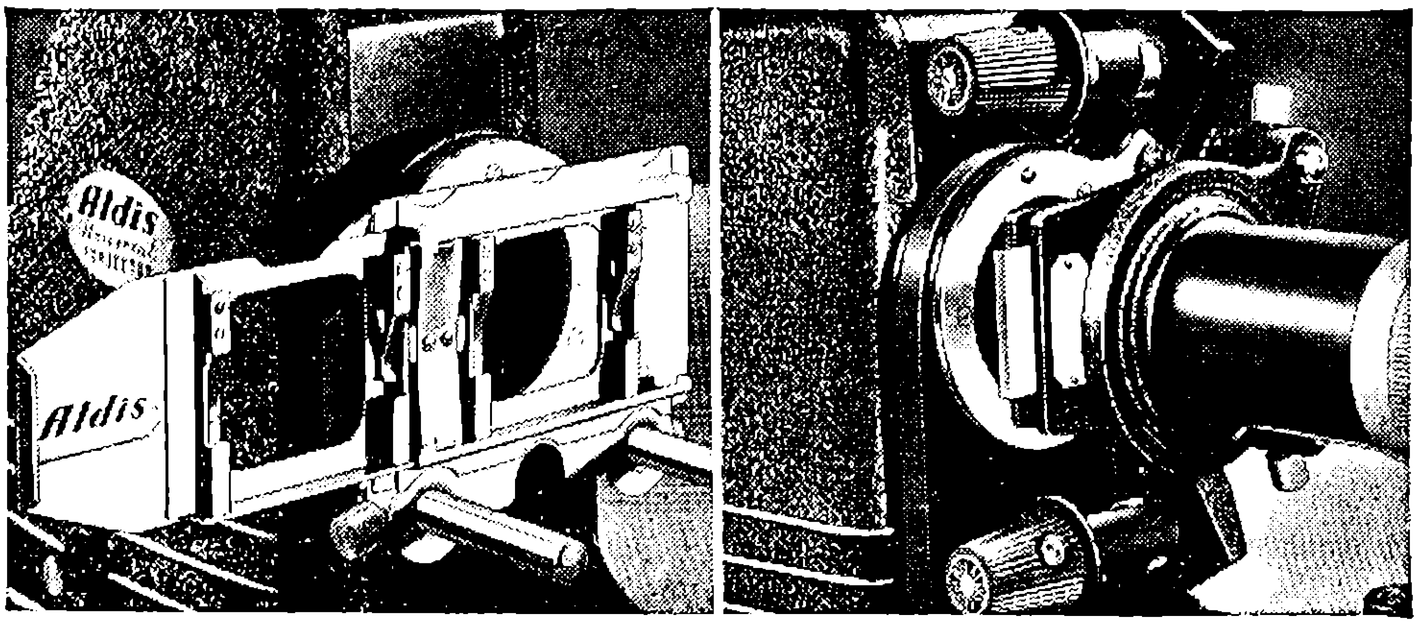

PLATE I

Above: The Aldis Universal Filmstrip Projector. Below left: The projector adapted for showing miniature slides. Below right for showing filmstrips.

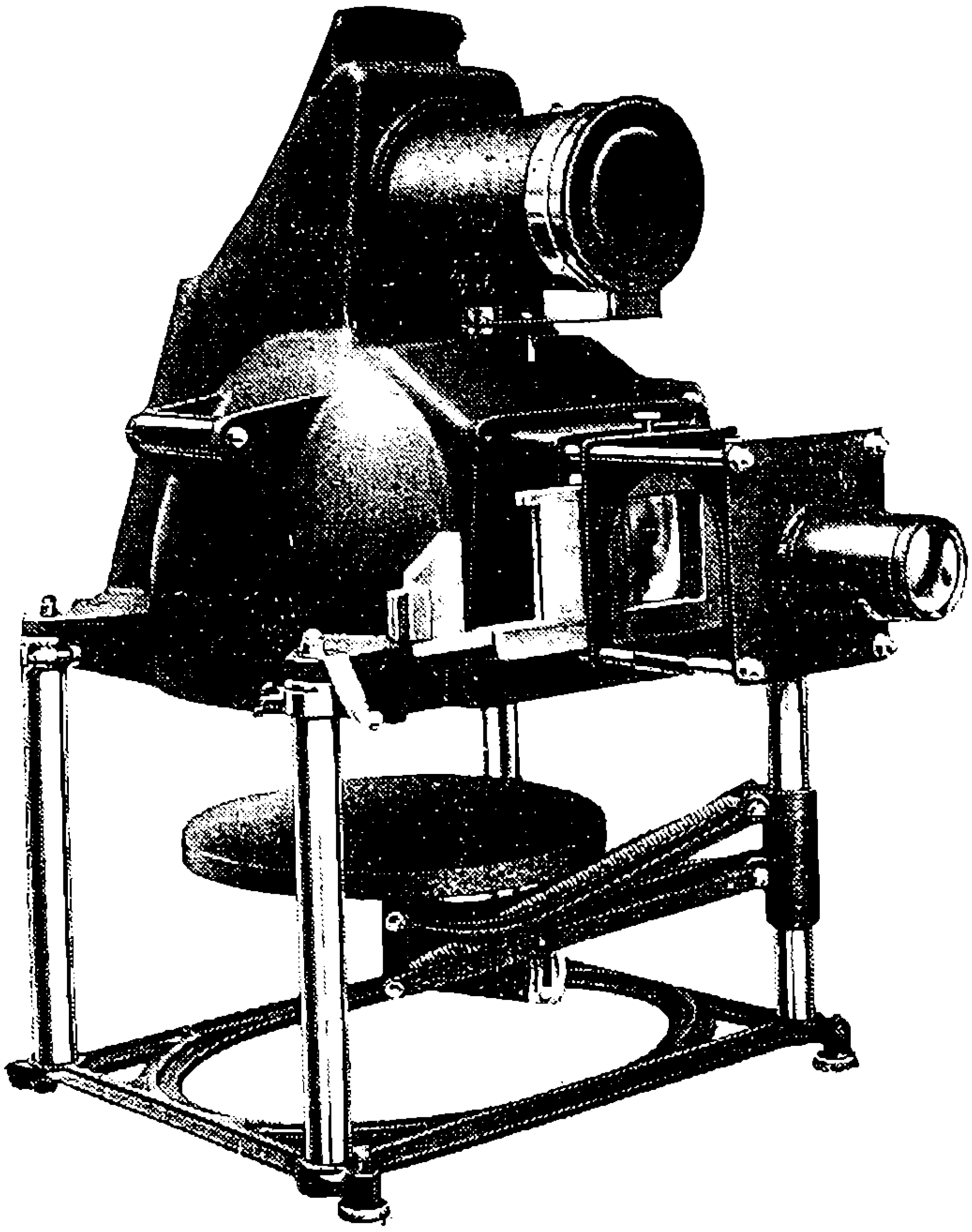

Plate II
The Aldis Epidiascope

to feed the lamp from A.C. mains by using a small step-down transformer.)

REFERENCES FOR THE MICROPROJECTOR

A Simple Projector, *School Science Review*, Vol. XVIII, p. 430.

A Projection Microscope, *Science Master's Book*, Part I, Physics, Murray.

A Microprojector, *School Science Review*, No. 52, June 1932.

A Method of Projecting Slide Experiments, *Science Master's Book*, Part II, Chemistry and Biology, Murray.

Report on the Uses of the Microprojector, *School Science Review*, October, 1945.

An Inexpensive Micrographic Projector, *Science*, 1932.

'A Microprojector', in *Visual Aids*, issued by Flatters and Garnett, Oxford Road, Manchester, 13.

The Microprojector in Science Teaching, W. E. Park Winder. Crosby Lockwood.

SCREENS

Some Practical Considerations

Screens must be considered with respect to their surfaces, to their size in relation to the nature of the audience and the light output of the projector. We must suppose that the shape of the projected image is fixed by the 'keystone' proportions, e.g. 4 × 3 for cinema films or single frame filmstrip. The audience, as far as possible, should all sit in a space not nearer than two-screen (i.e. picture) widths away and not further than six or seven screen widths away. In order that no member of the audience shall look at the screen at too great an angle to a perpendicular drawn to it, it is recommended by a Committee of the Society of Motion Picture Engineers that no row of seats should be longer than its distance from the screen. These desiderata are represented in the following diagram-plan.

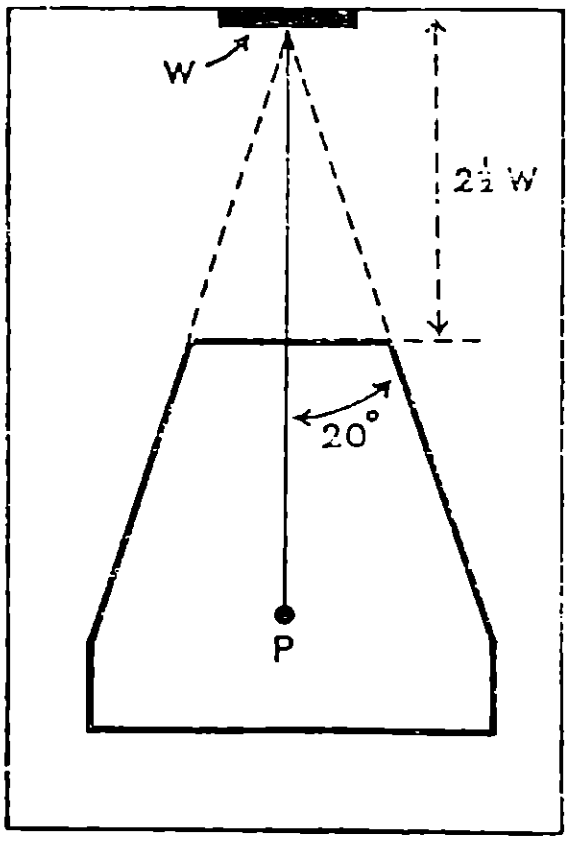

FIG. 19.

Plan of a room showing position of projector P and screen of width W. The seating should be within the six-sided figure with thick outline. In these circumstances a glass bead screen may be used.

A position too near the screen is very trying to the eyes, which are constantly trying to focus on an ill-defined image. Moreover a movement of the head and eyes is necessary to follow the action on the screen. Such movement is not only tiring, but a flicker, which would not be apparent at a longer distance, can now be seen when moving pictures are shown. Although the eye will tolerate a viewpoint which is some distance away from the normal to the screen, the perception of the keystone is distorted and shapes and movements are correspondingly upset.

There will be one and only one position which gives the nearest approach to correct perspective when the enlarged picture on the screen is viewed. The following equation gives the relationship between the various distances which are concerned.

$$\frac{\text{Distance of screen from observer}}{\text{Distance of screen from projector}} = \frac{\text{Focal length of taking lens}}{\text{Focal length of projection lens}}$$

The 'utility' lens for ordinary 16 mm. projection is of 50 mm. (2 in.) focal length and the equivalent lens for 16 mm. cameras is 25 mm. (1 in.) (This is the length which is calculated from that of the 35 mm. camera lens with which the original film is usually

photographed.) If these focal lengths are actually applicable to the making and projection of the film the best position of the observer will be half-way between the projector and the screen.

The above argument, based on simple geometry, need not be taken too seriously, for Thouless and other psychologists have shown that the perception of a picture is not necessarily 'proportionally' related to the exact size or shape of an image appearing on the screen.[1]

Experiments were made by the S.M.P.E. Projection Screen Brightness Committee in 1936 and in normal conditions it was determined that optimum screen brightness with the projector running without a film should be 10 foot-candles.[2]

Screens can be used for front and rear projection. In the first case light is reflected from the surface of the screen to the audience, and in the second it is transmitted through the translucent material (in which, in some cases, certain fluorescent substances are embedded).

1. *Front projection.* It is worth taking considerable pains to secure a good surface which will reflect the maximum amount of light without having directional properties which are too marked.

(*a*) The ordinary matt-white screen, which is made by painting a number of coats of matt-white paint on canvas, wood or smooth plaster wall-surfaces, reflects light without any very marked directional properties. Members of the audience who sit at the sides of the room see a picture which appears to be almost as well lighted as to those who sit in front of the screen. On the other hand the picture does not appear to be as bright as it would have been, other

[1] See Chapter II.

[2] This should more properly be called 10 foot-lamberts. A lumen is the amount of light (which can be measured as energy by a photo-electric meter) which falls per second on a unit area placed at right angles to the direction of the light at unit distance from a standard candle. A foot-lambert is the brightness of a surface emitting or reflecting one lumen per square foot.

things being equal, if a glass-bead or silver screen were in use and viewed from the front.

(*b*) *Silver screens.* Such screens are made by spraying a white, sized surface with aluminium ' bronze ' powder. No satisfactory screen will result by painting a surface with aluminium or silver paint which will invariably show streaks on projection. Portable silver screens on rollers soon ' crack ' and the surface begins to show irregularities. Such defects are painfully apparent during projection. Silver screens were popular with owners of small 9.5 mm. cinemas because they reflect so much light. The illumination of the picture soon appears to diminish if it is viewed at an angle of more than 15° from a normal to the screen. Silver screens give poor colour values with coloured films. The writer made a silver screen from a large sheet of plywood framed with substantial sides. Two coats of dead white (matt) paint were applied and the surface was sprayed with aluminium dust while the second surface was still moist. The surface was framed by a ' cushion ' of ' keystone ' proportions with dead black paint (the proportions are breadth 4 : height 3). The black surrounds absorb the light at the edges of the picture and give it the appearance of an oblong of light standing away from its surroundings. This produces a much more attractive and arresting effect than an image which partly fills the screen or spills over to its surroundings. On the whole, the writer does not recommend silver screens.

(*c*) *Glass-bead screens.* For cinema, episcope and filmstrip projection these screens are the finest for general use. The surfaces are rather vulnerable and stain easily. Also, they should not be kept rolled up in a damp atmosphere. They are made by spraying fine glass globules (not beads) on a white, sized surface. The resulting screen looks like sand-paper at first sight. Total internal reflection of the light

takes place in the tiny glass spheres at the surface of the screen, and the picture under good conditions has a crisp brilliance and sparkle which is not attainable by any other methods. The reflection is directional, though not to the extent of the silver screen. Viewers sitting within a cone, normal to the screen, of vertical angle of 40 degrees will find that there is little falling away of the illumination. The manner of reflection of the light at the glass bead is more complex than that at the silver surface and the ' angle of reflection ' is not equal to the ' angle of incidence '. A *minimum* degree of illumination for a cinema screen should be two foot-candles.[1]

Most children visit the cinema and therefore have had practice in focussing the eyes on the screen. At first there is a tendency to focus the eyes on the imagined distance of the object as in direct observation but most people soon acquire the habit of focussing on the screen and retaining this focus. Many people undoubtedly find this tiring as there is no relief from the constant object-distance. Children with long sight or short sight should have these errors of refraction corrected by wearing spectacles. If a picture is well illuminated and steady, no damage will be done to the eyes unless a child sits nearer than the minimum prescribed distance from the screen.

Matt white screens do not increase the contrast between dark and light in the picture nor do they tend to show grain. Water paint made from barium sulphate powder and size will serve quite well for making or renewing their surfaces. Silver and bead screens tend to increase contrast and to show the grain. Their surfaces are easily damaged. In the case of some of the cheaper types of bead screens, which have been made with a base of water-soluble size, deterioration may take place if they are rolled up for long periods in a damp atmosphere.

[1] A foot-candle is the intensity of illumination of a white screen at a distance of a foot from a standard candle.

The following table gives an idea of the way in which the illumination of the screen appears to fall off when it is viewed at an angle measured from the normal to it.

Angle from the normal.	Proportion of light reflected (assuming 100% from Beaded Screen at normal).		
	Beaded	Silver	White
0°	almost 100%	84%	35%
20°	38%	42%	32%
30°	30%	28%	27%
50°	16%	7%	20%

Table showing picture size in relation to position of audience.

Picture size	Front seats (Picture width × 2)	Back seats (Picture width × 7)	Depth of Audience
4ft.	8ft.	28ft.	20ft.
5ft.	10ft.	35ft.	25ft.
6ft.	12ft.	42ft.	30ft.
8ft.	16ft.	56ft.	40ft.
10ft.	20ft.	70ft.	50ft.

The linear size of a picture at a given distance varies inversely with the focal length of the projection lens, and with a lens of a given focal length the size of the picture varies directly with the distance between the projector and the screen; e.g. the picture will be twice as broad, four times the original area and illuminated only a quarter of the intensity if the distance between the projector and screen is doubled.

The following tables give picture sizes in relation to focal lengths of lenses and distances from the screen in respect of various types of transparency :

TABLE 1

FILMSTRIP OR MINIATURE PROJECTOR

(36 mm. × 24 mm. and 24 mm. × 18 mm.)

SIZE OF SCREEN	FOCAL LENGTH OF PROJECTION LENS								
	2″	2½″	3″	3½″	4″	4¾″	5″	6″	
	DISTANCE OF PROJECTOR FROM SCREEN								
40″ × 40″	4½′	5½′	7′	8′	9′	10½′	11′	14′	LARGE FRAME 36mm. × 24mm.
52″ × 40″	6′	7½′	9′	10½′	12′	15′	16′	17½′	
60″ 45″	7′	8½′	10′	12′	13½′	16′	17′	20½′	
6′ × 4½′	8′	10′	12′	14′	16½′	19½′	20½′	24½′	
8′ × 6′	11′	13½′	16′	19′	21½′	25½′	27′	32½′	
10′ × 10′	13½′	17′	20′	23½′	28′	31½′	34′	40½′	
12′ × 12′	16′	20′	24′	28′	32′	38½′	40½′	48½′	
40″ × 40″	7′	8½′	10′	12′	13½′	16′	17′	20½′	SMALL FRAME 24mm. × 18mm. (Standard 35mm. Cine Projector)
52″ × 40″	9′	11′	13′	15½′	17½′	21′	22′	27½′	
60″ × 45″	10′	12½′	15′	17½′	20′	24′	25½′	30½′	
6′ × 4½′	12′	15′	18′	21′	24′	29′	30½′	36½′	
8′ × 6′	16′	20′	24′	28′	32′	38′	40½′	48½′	
10′ × 10′	20′	25′	30′	35′	40′	48′	50′	60′	
12′ × 12′	24′	30′	36′	42′	48′	57′	60′	72′	

TABLE 2

STANDARD LANTERN FOR 3¼″ SQUARE SLIDES

SIZE OF SCREEN	FOCAL LENGTH OF PROJECTION LENS					
	6″	8″	10″	12″	14″	18″
	APPROXIMATE DISTANCE OF PROJECTOR FROM SCREEN IN FEET					
40″ × 40″ ...	7′	9½′	12′	14′	16½′	21½′
52″ × 40″ ...	do.	do.	do.	do.	do.	do.
60″ × 45″ ...	8′	10½′	13½′	16′	18½′	31½′
6′ × 4½′ ...	9½′	12½′	15½′	19′	22′	37½′
8′ × 6′ ...	12½′	16½′	21′	25′	29′	49½′
10′ × 10′ ...	20½′	28½′	34½′	41′	49′	61½′
12′ × 12′ ...	24½′	32½′	41′	49′	57′	73½′

TABLE 3

ALDIS EPIDIASCOPE
(18½″ lens)

SIZE OF SCREEN	FULL SIZE 8½″ Circle	MASKED 6½″ Square
	Dist. of Projtr. from Screen	
40″ × 40″	8½′	10½′
52″ × 40″	do.	do.
60″ × 45″	9½′	12′
6′ × 4½′	11½′	14′
8′ × 6′	14½′	18½′
10′ × 10′	23′	30′
12′ × 12′	27½′	35½′

TABLE 4

16mm. CINE PROJECTOR

SIZE OF SCREEN	FOCAL LENGTH OF PROJECTION LENS					
	1″	1½″	2″	2½″	3″	4″
	Distance of PROJECTOR from SCREEN					
40″ × 40″	7½′	12′	18′	20½′	24½′	32½′
52″ × 40″	10½′	15½′	20½′	25½′	32′	42½′
60″ × 45″	12′	18½′	24½′	30′	36½′	49′
6′ × 4½′	14½′	22′	29½′	36′	44′	59′
8′ × 6′	19½′	29½′	39′	48′	59′	78½′
10′ × 10′	24½′	36½′	49′	60′	74′	98′
12′ × 12′	29½′	44′	59′	72½′	88½′	118′

Picture Size in relation to Focal Length of Projector lens may be determined from the formula :

$$\text{Width of Screen Picture} = \frac{\text{Distance—Focal length}}{\text{Focal length}} \times \text{Size of frame}$$

Projection without complete black-out.

Although episcopes, sub-standard cinemas and microprojectors require a good ' black-out ', much useful projection can be done in a room which is only semi-darkened. In light spring weather blinds have to be drawn or curtains moved, but in winter even this is not always necessary. In a ' semi-dark ' room the white surface of the screen which is still visible becomes the black of the picture. A beaded screen should be used if seating considerations permit it, or alternatively, rear projection may prove to be suitable. Daylight or ' semi-dark ' projection has the advantage that the classroom atmosphere and the relation between teacher and class are preserved, whereas a feeling of artificiality and strangeness or a sense of ' special occasion ' may arise from the complete darkness of a blacked-out room. With daylight projection children can see the teacher and can take notes. If direct light is shielded from the screen as far as possible, and if it is arranged so that it does not reflect light back to the audience from any direct source (other than the projector) conditions will probably be satisfactory, if the instrument is carrying a maximum wattage source of light and has a good, wide-aperture lens. It may be possible to black-out the end of the room which contains the screen, or even to place the screen at the end of a tunnel or tent made from black material. In the case of a small screen, it may be placed at the bottom of a box, the interior surfaces of which have been painted dead black, the open end (top) of the box facing the audience. Rear-projection screens are usually held erect at a convenient height on wooden stands and are fitted with black top and side covers to screen direct light from them. These will give remarkably bright pictures, provided that the projector is adequate, even when the room is not darkened. Dull grey walls and ceilings are useful in rooms which are to be used for optical projection, for extraneous light tends to be absorbed and not reflected from them, though it must be admitted that their appearance is not inspiring in ordinary illumination.

2. *Rear projection.*

Suitable surfaces for rear projection screens are :

1. Cartridge paper which has been treated with oil, or waxed by soaking it with a solution of wax in spirit.
2. Ground glass.
3. Thin linen or cotton fabric which has been treated with a drying oil.
4. High grade tracing material such as Kodatrace.
5. Translucent white plastic in flexible sheets such as *Celastoid*, *Bexoid* or *Cinebex.*

In each case the translucent material is mounted and, if necessary, stretched in a wooden frame which is carefully coated with dead black paint. The plastic sheets are very popular for such screens but have the disadvantage that they tend to expand with changes in temperature and climatic conditions. Some of the better commercial types of screen, which use such material, have a spring device which pushes up the top bar of the frame and thus keeps the screen under tension, and obviates any tendency for it to hang in folds. When the screen is home-made the top bar of the frame can be made to slide in grooves in the two side pieces and, when the screen is stretched, the top piece is screwed into position with two winged nuts. It must be remembered that the image will be reversed from left to right when projecting in the normal way from the rear. A reversing prism, or more usually a mirror, is used to rectify the image (see page 105). With silent films or filmstrips the film may be turned round in the gate for projection and there is then no need of further reversal for rear projection. A simple type of ' vertical ' episcope used without a reversing mirror gives a reversed image with front projection and therefore will produce a true image with direct rear projection. Such small episcopes are made for this purpose by Aldis, Ltd.

The diagrams and plans given on p. 146 show some of the best ways of arranging screens and projectors in ordinary classrooms. Other points in connection with rooms, black-out and ventilation have been mentioned in the section on cinema projection. In all forms of projection there will be keystone distortion if the beam of light does not reach the screen so that opposite lines made by the outside of the beam give similar angles to the plane of the screen. The screen should normally be at right angles to an imaginary straight line in the centre of the beam. If the optical

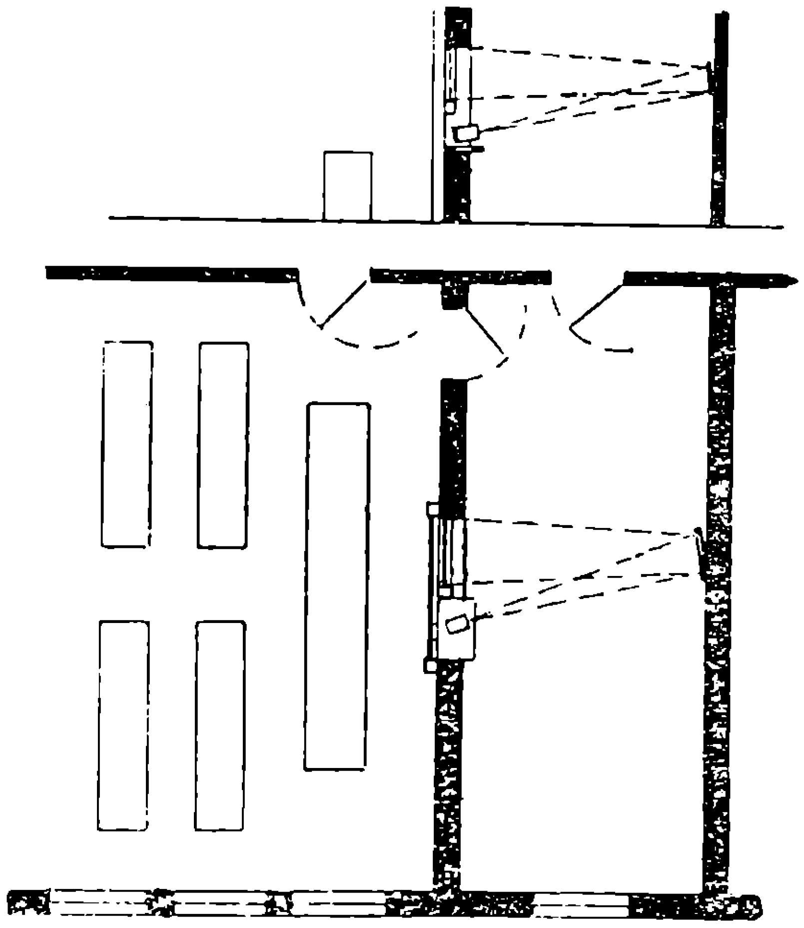

FIG. 20

Plan and elevation of a lecture room with preparation or ante room adapted for rear projection. The blackboard is pushed aside to reveal a translucent screen framed by a rectangular window cut in the wall which separates the rooms.

path of a ray of light at one side of the beam is different in length from that of a ray of light at the other side of the beam there will be distortion. This should be kept in mind, (1) when a projector is tilted upwards or downwards without a corresponding change in the plane of the screen, (2) when the beam from a projector is changed in direction by means of a mirror either for rear projection or to obtain reversal of the image from side to side.

Projection Lamps.[1]

The great simplicity, convenience and cheapness of operation of optical projectors is due almost entirely to improvements in illuminants. The last hundred years have seen progress from oil illumination to lime-light (oxy-hydrogen or oxy-gas flame impinging on a lime cylinder), coal gas, acetylene gas, electric arc and Nernst filament to the modern projection bulb, which is used in practically all projection apparatus, except the commercial cinema where the use of the electric arc is still general.

A projector lamp is a tungsten-filament lamp designed only for use in an optical system. The differences between the projector lamp and the ordinary house-lamp include filament shape, colour temperature, efficiency, brightness and life.

The lamp is an integral part of the optical system of the projector and thus the size, shape and position of its filament are of great importance. A wrongly shaped filament will lower efficiency and cause poor quality projection. The light-producing ability of a lamp is generally measured in lumens[2] per watt. The ordinary domestic lamp has an efficiency of about 13 lumens per watt (L.P.W.) whereas a projector lamp has an efficiency of 18 to 27 L.P.W. approximately. Colour temperature is a measure of the heat of the filament measured on the absolute scale of temperature. The domestic lamp may have a colour temperature of 2,600 degrees whereas that of a projector lamp may go up to 3,200 degrees. As will be expected, the projector lamp, because of its higher efficiency, colour temperature and brightness, has a shorter life than the ordinary domestic lamp. The average life of a projector lamp is 50 hours. This can be extended by using it at a voltage slightly lower than that for which it is rated, but the

[1] Much useful tabulated information will be found in ' Projector Lamp Guide ' (2nd Edition) issued gratis by Neville Brown and Co., Ltd., Newman Yard, Newman Street, London, W.1. The Mazda Booklet, published in America by the Mazda Lamp firm, gives scientific details concerning many types of filament lamps.

[2] See the section on screens and screen illumination.

projected picture then has a yellow, dull quality in the high-lights. A voltage of a few per cent above that rated for a lamp will often result in greatly increased brilliance, but at the cost of an extremely short life and a higher rate of filament deposit on the glass envelope of the lamp. If a lamp has given service for as much as a hundred hours the projectionist will have to decide whether to discard it even when its filament is still intact. By this time a deposit from the filament will have been sputtered on the inner glass surface of the bulb, obscuring much of the light and destroying its intense whiteness.[1]

Most modern projectors take their electric supply direct from the mains. The bulbs may consume 100, 250, 500 or more watts and can be fitted with Edison screw or pre-focus caps, which latter are a development of the bayonet type of fitting. The pre-focus cap is very popular for by its use the lamps are automatically centred and no adjustments are necessary every time the lamp is changed. A fact, little known, is that low voltage bulbs give much more light for their wattage for projection than bulbs at a higher voltage. The greatest efficiency is given by bulbs working between 18 and 30 volts. Obviously there would be difficulties in constructing thick filament bulbs for giving large outputs on these low voltages, but it is often possible to use voltages of 100 or less in filmstrip projectors and 30 or less in microprojectors by stepping down mains A.C. by means of small transformers. Calculations concerning voltage, amperage, wattage and resistance for lamp circuits are given in the appendix. When bulbs are purchased it is necessary to specify the type of projector for which they are required and also the voltage, wattage and type of cap.

[1] It should be added that the filaments of projection lamps are not infrequently broken by the sudden changes in temperature and the powerful magnetic stresses in their coils when the full current is turned on at once. Some operators include a rheostat in the circuit so that they can bring up the current from zero. A partial measure to reduce the risk of fracture of the filament is to introduce a resistance in the lamp-circuit and short-circuit the resistance after the current has been turned on.

Note on the Copyright of Visual Material.

'The reproduction without the consent of the owner of the copyright of any protected work or any substantial part thereof in any material form is an infringement of copyright. The only exceptions in this rule which are material for the present purpose are:

If a person were to use an epidiascope to throw on the screen in front of his class an illustration from a copyright book there would be no infringement; but if he were to make a filmslide of the illustration for use in the same way he would be infringing the copyright. . . . It is essential in the first place to get the consent of the owner of the copyright. It is by no means always clear who this is, but in the case of published books or postcards, the publisher is generally well-known, and if he is not the owner of the copyright he can generally say who is. It is important that any use of copyright material should be within the terms of the permission given. If, for instance, the permission is to use the copyright material for educational purposes in school, use of the copyright material for commercial purposes would involve an infringement.'[1]

BIBLIOGRAPHY

Technical Aspects, Projection., Etc.

Optical Aids, Pamphlet 115, H.M.S.O.
Practical Projection for Teachers, Atkinson, Current Affairs.
Look and See, Beale, Carey Kingsgate Press.
Filmstrip and Slide Projection, Kidd and Long, Focal Press.
Filmstrip Projectors, Photographic Dealers Association.
The Audio Visual Projectionists' Handbook. Business Screen, Chicago.
Manual of Sub-Standard Cinematography, Pereira, Fountain Press.

[1] This is a summary of the legal advice taken by the British Film Institute in view of the increasing use of filmstrip material for teaching and other purposes.

Cine-Film Projection, Hill, Fountain Press.
Projectionists' Fault-Finding Chart, Hill, Fountain Press.
Filmstrip Projection, Hill, Fountain Press.
An Introduction to Filmstrips, H. R. and I.W. Dance, Harrap.
Making Lantern Slides and Filmstrips, Milner, Focal Press.
Projector Lamp Guide, issued by Neville Brown.
Mazda Lamps, issued by Mazda.
The Kodak Museum, issued by Kodak.
British Journal Photographic Annual, ed. Dalladay, Henry Greenwood.
Ciné Almanach Prisma, Boyer and Faveau, Paris Prisma.
Better Color Movies, Bond, Cameracraft, San Francisco.
Amateur Movies and How to Make Them, Strasser, Studio Publications.
Colour Photography in Practice, Spencer, Pitman and Greenwood.
Colour Photography Transparencies, Thomson, Focal Press.
Colour Photography, Various authors, Kodak.
Making Colour Prints, Coote, Focal Press.
La Couleur dans la Technique Cinématographique, Piraux, Editions Nouvelles, Paris.
The Complete Projectionist, Cricks, Odhams.
Sound-Film Projection, Campbell, Law, Morris and Sinclair, Newnes.
Manual of Postercraft, Clemence, Blandford Press.
Making a Poster, Cooper Austin, Studio Press.
Colour in Display, Quentin Crisp, Blandford Press.
Handwork for Teacher and Scholar, Sanger Davis, National Society.
Commercial Model Making, Wickham, Vawser and Wiles.
Biblical Models and How to Make Them, Evans and Walker, National Society.
Silk Screen Process Reproduction, Hiett and Clemence, Blandford Press.
Practical Silk Screening, Middleton, Blandford Press.

Choosing a School Projector, British Film Institute.
Using a School Projector, British Film Institute.
Teaching with School Projector, British Film Institute.
Photography is a Language, Whiting, Fountain Press.
Composition for Photographs, Haile, Fountain Press.
Composition, Whettett, The Studio.
Blackboard Drawing, Higham, National Society.
More Blackboard Drawing, Higham, National Society.
A Book about Books, Harrison, Murray.
Practical Guide to Printing and Stationery, Hermes, Fitzroy
Type Designs of the Past and Present, Morrison, Fleuron.
Printing To-day, Tarr, Oxford.
Black on White, Ilin, Routledge.
Perspective, Buckley, Pitman.
Handicraft and Physical Geography, Lismar and Playle, Pitman.
Modern Lettering from A to Z, Wade, Pitman.
Writing and Illuminating and Lettering, Pitman, Pitman.
Making and Using Film Strips, L. T. Green, Pitman.
Projection in Schools, Gopsill, Film User Press.

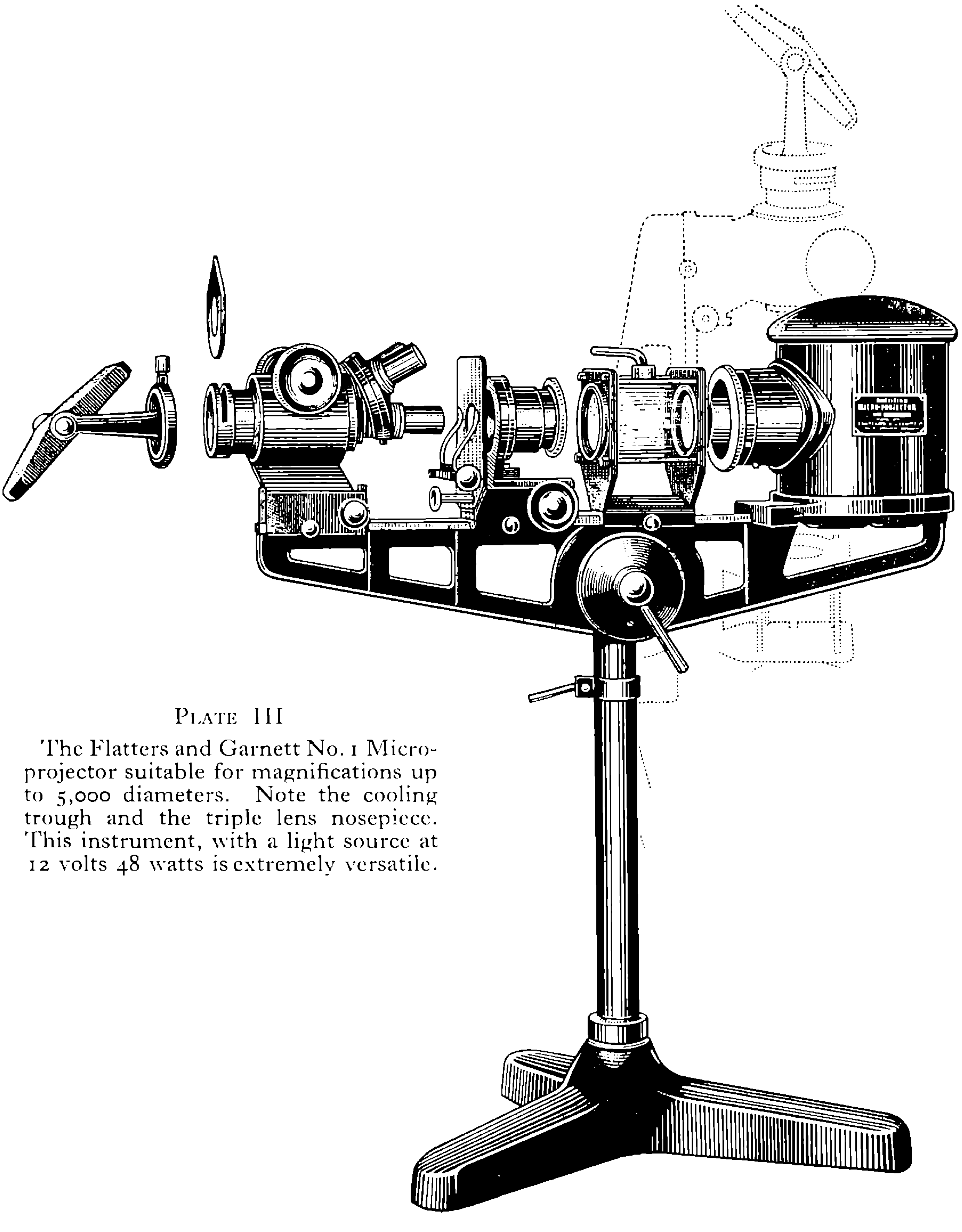

PLATE III

The Flatters and Garnett No. 1 Micro-projector suitable for magnifications up to 5,000 diameters. Note the cooling trough and the triple lens nosepiece. This instrument, with a light source at 12 volts 48 watts is extremely versatile.

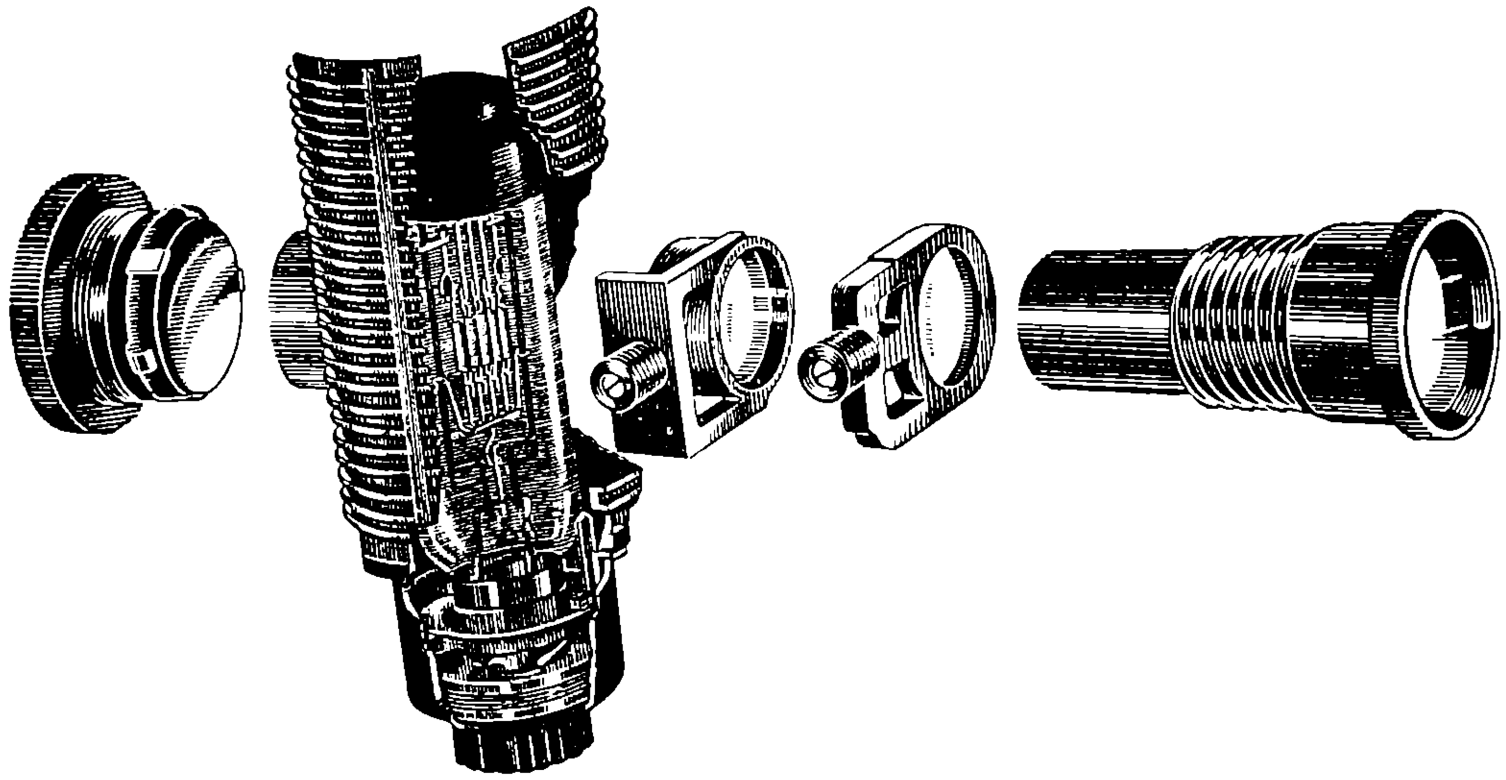

PLATE IV

An ' exploded diagram ' showing the optical system of the G. B. Bell-Howell 601 16 mm. film projector. From left to right reflecting mirror in mounting, pre-focus lamp in lamp house, first condenser, magnalite condenser, projection lens.

CHAPTER VI

THE CINEMA IN EDUCATION

'The documentary film does not teach the new world by analysing it. Uniquely and for the first time it communicates the new world by showing it in its corporate and living nature.' *John Grierson.*

The Cinema

THE modern talking film and its projection equipment have resulted from the development of a considerable number of physical and chemical principles during many years.

Persistence of Vision (Phi-Phenomenon)

The human eye and mind are able to perceive only eight to ten separate sensations each second. If a number of pictures showing progressive and graduated movements, greater than about a dozen a second, are presented to the eye the sensation of a continuous movement results. As early as 1831 Plateau used the principle in an optical toy which was called the Phenakistoscope, and later the Zoetrope appeared.[1] This device was generally ascribed to Desvignis in 1860 but W. G. Horner in The Philosophical Magazine of 1834 suggested an arrangement similar to that claimed by Desvignis a quarter of a century later. The Zoetrope consisted of an open cylinder having vertical slots around its surface. Below these slots and inside the cylinder viewed through the slots there were simple pictures graduated in movement from one to the next and these appeared to move when the cylinder was slowly rotated. The Praxinoscope, introduced by Reynaud in 1877, may be considered to be the immediate predecessor of the cinematograph, since, in its later development (1895–6) it employed an endless band of pictures illuminated by an arc lamp and projected on a screen. However, before this

[1] Examples of this early apparatus may be seen at the South Kensington Science Museum, S.W.7, or at the Kodak Museum, Wealdstone, Harrow, Middlesex.

K

date, celluloid film had been used by Friese-Greene in 1889, and by Edison in 1893 in his famous kinetoscope. Both Lumière, working in France, and Edison in the U.S.A., developed in 1895 commercially practicable projector mechanisms and, after a very few months, were followed by Robert W. Paul in England.[1] The phenomenon of the persistence of vision interested the scientists Davy and Herschel and it has been investigated by psychologists in more recent years. It has been shown that lengthening the period of illumination before changing to another picture hinders fusion. Here is the justification for the flicker shutter in the cinema projector which cuts off the light when the frame of the film is stationary in the gate of the projector. Smaller objects show better fusion than large ones, and beyond a certain threshold, flicker is more apparent with intense illumination than with feeble.[2] Silent films were formerly projected at 16 frames a second; modern sound films go through the projector at 24 frames a second. The shutter cuts off the light a further 24 times a second, making a total of 48 occultations a second and eliminating flicker under normal conditions. With silent films shown at 16 frames a second a three-bladed shutter is provided and this produces the same number of 48 occultations per second.

The Optical Projection Principles

The cinema used the 'magic-lantern' principle for the projection of its images and thus it was dependent on the development of optical projection. The principle of the camera obscura was known to Euclid (300 B.C.) and Leonardo da Vinci described it in the 15th century. G. della Porta, about the year 1550, described the use of lenses both for use in the camera obscura and for the projection of images. It is said that Roger Bacon, the English monk (1214–1294) knew of the basic principles of the magic-lantern.

[1] From the Kodak Museum Handbook.
[2] Cormak and Koffka. Psychol. Forsch. (1922), 1.66.

The instrument became popular in the latter half of the 19th century in England as an aid to lecturers. Lantern slides were produced before the development of the photographic plate had made the matter more simple. Lantern lectures were a very common means of instruction between 1865 and 1920, and even to-day the optical lantern has not been completely displaced by more recent projection devices. Considerable ingenuity was shown in producing sources of illumination until the convenient electric bulb was perfected. Multi-wick paraffin and camphor burners, acetylene, lime-lights fed with oxygen which, before the days of steel cylinders, was transported in rubber bags, were all used. The history of popular religious instruction in this country should give an honourable place to the lecturer's portable lantern, his heavy box of slides and his own persistence and ingenuity in spite of difficulties of transport.

The Development of Flexible Film

The early experiments of Muybridge (Muggeridge) in 1872 on the analysis and synthesis of motion were performed with glass photographic plates. In spite of the various methods which were used for presenting the separate transparencies to the eye in quick succession no real development in the cinema was possible until Eastman (the founder of the Kodak firm) invented the photographic film. In 1884, he made a machine for the continuous emulsion-coating of paper, and five years later he produced the first transparent roll film on celluloid (nitrocellulose) as a base.

The number of separate pictures or ' frames ' exposed in the camera and projected on the screen was reduced to sixteen per second for the silent film by the French brothers Lumière, and this became fairly general until 24 frames became the standard of the talking film.

Thus, the silent film combined the principles of persistence of vision, the camera and optical lantern and the use of flexible photographic film.

Edison had a number of patents in 1895 for a film projector with which a phonograph record could play in synchronisation, and Lauste had an ingenious means of cutting a sound-track mechanically in ' waves ' at the edge of the film, thereby, making the first ' sound on film ' device. Nevertheless, no real progress was possible in talking films until electronic valves and suitable circuits had provided the means of amplifying small electric currents. Also, it was necessary to have photo-electric cells which were capable of responding to nearly 10,000 changes in light intensity each second, and loud-speakers which produce undistorted sound energy, over a wide range of frequencies, equivalent to a dozen or more watts of power. Each stage of the technical progress of the cinema was characterised by the further application of scientific principles. Various methods of colour photography have now been applied to the cinema; for the commercial 35 mm. cinema the most commonly used is Technicolor in which three dyes, magenta, yellow and turquoise (cyanin) are applied by means of photographic matrices to clear non-photographic film-base.[1] Stereoscopy can be performed in a limited and crude way of taking pictures from the viewpoint of the left eye through a green filter and from the viewpoint of the right eye through a red filter, at a total rate of 48 frames a second. The projected images are then viewed through spectacles with one green and one red filter. A small theatre in Moscow which seats less than 200 has shown stereoscopic films which demand a specially constructed screen and the necessity of each member of the audience keeping his head still while he is looking at the screen.

The size of each frame or picture in standard silent film is 24 mm. by 18 mm. and this gives about 16 pictures to each foot of film, the speed of which, in running through the projector, is about 1 foot per second at ' 16 frames a second '. The shape of the picture irrespective of size, that is, the ratio of the length and

[1] See the Appendix, Colour.

breadth of the rectangle is known as the *keystone*; the breadth, height ratio is 4 : 3. A 1,000 feet roll of silent 35 mm. film, known as reel, takes nearly 17 minutes for projection at a rate of 16 frames a second.

With the advent of ' talking films ' the speed of projection was increased to 24 frames each second. This gave a 50 per cent increase in the length of film which went through the projector in a given time. Therefore it gave more space for a faithful reproduction of the sound track which would contain varying densities or wave shapes in small space. It must be noted that both speech and music contain vibrations over 8,000 per second, although in some cases intelligible and musical results may be obtained with a cut-off at a lower frequency.

35 mm. film, whether sound or silent, is bulky, and six reels of sound-film packed in circular tins and enclosed in a square zinc canister are large and heavy. For home use, Pathé introduced a film which was half the width (17.5 mm.) and a quarter of the area of the standard size, but this never became popular in England. A smaller size 9.5 mm. in width, with sprocket holes in the middle of the film between frames, had a considerable popularity for amateur use because it was cheap and it was easy to take films in this gauge. Nevertheless, the 16 mm. film introduced by the Eastman-Kodak Co. in 1923, for the purpose of amateur ' home-movie ' making, tended to displace all other substandard types in Britain, America and most of the other countries of the world.

As far as ordinary classroom and general school projection are concerned it has become the accepted size. Considerable libraries of such films have been developed and the amateur production of such films for record research or instructional purposes is not an expensive matter.[1] In most cases when films, such as

[1] There is an 8 mm. gauge silent film with sprocket holes on one side only which is made by cutting 16 mm. silent film down the middle. This miniature film allows amateur films to be made cheaply and gives a picture large enough for home entertainment. All the projection and photographic equipment mentioned in this book was obtained from F. E. Jessop, 4 Oxford Street Leicester.

government, instructional or documentary films, are professionally made, this is first done with 35 mm. film. The negative for the 16 mm. film is then printed by a process of optical reduction. The picture need not suffer in definition or contrast by such treatment but it is sometimes impossible to prevent the sound track from doing so. A new recording of speech and music especially for 16 mm. gauge would usually effect great improvements. 16 mm. films which produce sound which cannot be understood are still found and the fault does not always lie with the projector or the acoustical environment.

Silent 16 mm. film has sprocket holes on both sides, but sound film has these perforations on one side only and the sound track is on the other side.

The 16 mm. film made to S.M.P.E.[2] standards and in use in Britain and the U.S.A. has the sprocket holes on the right facing the screen, if the film is travelling through the machine to produce its picture the correct way round. Films should be rewound so that emulsion or dull side is on the *outside*. Silent film may be shown by using a talking-film projector but sound film must never be projected on a silent film machine or the sound track will be damaged by the claw or sprockets. If the sprocket holes and sound track are on opposite sides from those of S.M.P.E. Standard, as in some German films, we then have D.I.N. film. If this is to be shown on a S.M.P.E. sound-machine the picture will be the mirror image of that which is intended by the film makers. The film can be projected the correct way round by using rear projection, or by using a reversing mirror placed at 45 degrees to the line of the projected beam and 45 degrees to the surface of the screen, which will therefore be parallel to the beam of light which leaves the machine. Again we may use a reversing prism attached to the front of the machine. With silent D.I.N. films there is no difficulty, for the film can be projected with the emulsion side inwards.

[1] Society of Motion Picture Engineers.

The linear dimensions of 16 mm. film are 4/10ths of those of 35 mm. Thus 400 ft. of 16 mm. film is equivalent to a reel of 1,000 ft. of 35 mm. film. Standard film has nearly 16 pictures to each foot length and thus the sub-standard has nearly 40 pictures in a similar length. 1,000 ft. of standard sound-film projected at 24 frames a second runs 10.9 minutes approximately. Therefore, 400 ft., 800 ft., and 1,600 ft. reels on 16 mm. sound film run for nearly 11, 22, and 44 minutes respectively. Accordingly, most 16 mm. projectors, without any adaptation, may be loaded with enough film to continue projection for about three-quarters of an hour.

All films were originally printed on a celluloid base. Celluloid is cellulose nitrate plasticised with camphor, is highly inflammable and capable of burning in its own oxygen with explosive violence. All 16 mm. and some 35 mm. films are now made with a cellulose acetate base and although this will scorch if subjected to a high temperature for too long a period, it is perfectly safe for classroom use. On no account must 35 mm. celluloid film be used or stored without special provision being made to fulfil the Home Office requirements. In schools it will only be necessary to use 35 mm. film in the largest halls which have separate projection boxes outside the actual building.

At this stage it may be useful to say a little concerning the method of producing the sound in the film. Originally, large diameter gramophone records were made to carry the sound, but synchronisation was difficult and easily disturbed, even though it had been correct at the start. Moreover, the records were bulky, easily damaged and not easy to transport. Progress could only come when the sound track was printed as a photographic image on the film itself. In 35 mm. film the sound is printed between the pictures and the sprocket holes on one side, 26 frames ahead of the picture, but in 16 mm. film there are no sprocket holes on the side of the film which contains the sound track with which it synchronises. It is outside the scope of this book to discuss the details

of sound recording but it will be easy to imagine the stages by which it is done. Sound is picked up by a microphone, and the feeble speech currents are amplified by valves. The resulting electric current, which varies in relation to the changes of pressure in the sound-waves, is made to modulate a light beam which then falls on a moving photographic film. The mechanism by which the light beam is modulated, that is, controlled in intensity, shape or position, differs with the system used. Two main types of sound track are in use : the first is the variable area sound track in which a black wave form is printed on a transparent background. The wave form may be single or double. (In the latter case it is symmetrical about a central line.) The second type is variable-density recording and is easily recognised in the form of a number of short lines of different thickness, spacing and density at right angles to the length of film. The sound track is usually printed and processed on a separate film and later 'married' to that containing the picture images in the 'master' copy.

In order to obtain the sound back again from the film it is necessary to use the sound-track to cause modulation or fluctuation of a beam of light passing through. This light of varying intensity is made to control corresponding variations in an electric current which is then amplified and fed to loud speakers. The heart of the matter is the photo-electric (P.E.)[1] cell which converts

[1] For many years it has been known that the electrical resistance of the semi-metal selenium is lowered when it is exposed to bright light. This gives us the germ of the idea of the action of the photo-electric cell. In the case of a cell made with selenium, there is a lag of some seconds' duration between the time at which it is exposed to the light and the change in its electrical resistance. The changes in illumination when a beam of light is made to scan a film sound-track amount to some thousands each second. A high note within the range of audible sound may have upwards of 7,000 complete vibrations each second. It is obvious that a photo-electric cell with selenium as the sensitive substance will be quite useless for sound-film work. Many types of photo-electric cell have been developed. For cinema projection such cells should be sensitive to light which is not very actinic (in actinic light the energy is mostly at or beyond the blue end of the spectrum) and they must be extremely rapid in action. The changes in their electrical properties must follow those in the incident light with a lag of only a few millionths of a second. When light

a varying light-intensity into a correspondingly varying electric current.

After the film has left the picture gate it is necessary that its 24 per second intermittent motion should be smoothed out so that it will pass through the ' sound-head ' with a perfectly smooth and steady movement. Most of the jerky movement is absorbed in the lower loop but it is also necessary to maintain a constant speed and this is ensured by passing the film over a heavy roller or flywheel, the inertia of which is sufficient to counteract any small fluctuations of speed.

In the cinema projector the film is pulled through the machine so that it is held at rest for a fraction of a second during which time light passes through a frame and the image of the picture thereon is cast on the screen by the projection lens. Sixteen times a second for the old silent film and twenty-four times a second for sound and many modern silent films, the frames are changed to give place to the next frame on the film. While this motion is taking place a rotating shutter cuts off the light. The shutter has

falls on a very thin layer of the metal caesium or an alloy of it on a silver plate in a vacuum, electrons are immediately liberated. If there is also a positively charged electrode in the evacuated glass bulb the released electrons will be attracted to it. Thus a current will pass between the coated cathode-plate and the anode and so in the presence of light the resistance of the cell will appear to fall and a small electric current will flow. This can be magnified in the ordinary way by amplifying valves and then it is fed to the loud-speaker. The action of the P.E. cell in the projector is as follows : light from a small exciter lamp or from the main lamp (in conjunction with a special optical system separate from the projection system) is converted into a narrow flat beam which is made to pass through the sound track of the moving film. The varying densities or wave shapes of the silver image in the sound track modulates the light intensity of the beam and this is then allowed to impinge on the cathode plate of the P.E. cell. The projector may contain the valves, condensers, resistances and other parts of the amplifier, or this may be constructed as a separate unit. The latter arrangement has some advantages as there is then no need to make the amplifier as compact as it would have to be if it were incorporated in the base of the projector. Moreover, if there is a failure of this unit it can be replaced by a reserve and the whole projector is then not made *hors de combat*. The advantages of having the projector and amplifier built together in a single case are those of portability and the saving of space.

an additional function: if the illumination on the screen is obscured 48 instead of 24 times each second, by a blade of the shutter cutting off the light once *while each frame is at rest in the gate* there is a further reduction of flicker; that is, persistence of vision (the phi-phenomenon) has a better chance to give the idea of continuity to the movement. In the case of silent films showing at 16 frames per second the three-bladed shutter should temporarily replace that with two blades to produce occultation of the light at 48 per second. The mechanism by which the sound-film is jerked through the machine at 24 frames a second varies according to the type of machine. In the 35 mm. cinema there is a Maltese-cross movement which turns sprocket wheels in a suitable intermittent manner, and in some very expensive 16 mm. machines this has been adapted for the smaller movement. More often the movement is effected by means of a claw, the prongs of which fit into the sprocket holes of the film, force it downwards, withdraw, ascend out of contact with the film, enter the film again and repeat the cycle. It is apparent that at the speed required, considerable forces of inertia have to be overcome. Even the toughest of steel prongs ultimately show wear, and, unless the film is free to run easily through the machine, both film and claw may be damaged. The gate, in which is held the part of the film being projected, is usually a metal plate held in position under pressure from springs. It need hardly be stressed that the gate and film runway must be kept very clean. A single particle of grit may score a line on a new film for hundreds of feet. In the G.B.L. 516 machine there is no gate but the film is held at both sides, and a spring-loaded, curved, metal holder is applied to one edge of the film.

(There are other means of effecting the intermittent motion of the film. The Siemens ' Beta ' movement pulls on the film below the picture gate. In addition, a number of instruments have been patented in which the film is kept in continuous motion and the ' intermittent ' is produced by a revolving drum to which are attached small tangential mirrors. At present such

arrangements are only used for small pictures and for the viewing machines used by film cutters, but much trouble, wear and tear would be saved if the 24 'jerks' per second of the intermittent motion through the gate could be eliminated.)

It is obvious that the rapid jerking of the film must not be communicated to the reel, or damage to film and claw would result. Further, the motion of the film must be continuous and uniform in speed at the point at which the sound track is scanned by the light beam in the 'sound-head'. Film loops must be preserved both above and below the gate. Many machines have a trip-switch which cuts off the light and stops the machine if a loop is lost. If such a device is not fitted to the machine it is unwise to leave it during projection, else a defective film may be more seriously damaged, and even the working parts of the machine itself may suffer strain or damage. Directions, in diagrammatic form, for lacing the machine are usually supplied with it, and the information thus supplied should be followed as closely as possible. It will be noted that a constant length of film is trapped in the machine between the moving sprockets as it comes from the reel and is discharged to the take-up reel respectively. In particular, it is necessary to observe that the second loop of a sound-film is maintained at the constant size prescribed by the maker. The sound-track, corresponding to a particular frame, is printed at a distance of 26 frames ahead of the centre of the picture and if this distance is lengthened in the loop between the picture and sound-gate a lack of synchronisation between picture and sound will result. Although a little harm will come from a slight failure to synchronise a picture which is merely supported by a commentary, the matter is seriously irritating in such a film as 'Instruments of the Orchestra' where, for instance, the movements of the violin bows should correspond to certain precisely timed sounds.

Some types of projectors are fitted with a *Still-picture device* which stops the film, interposes a heat filter of metal mesh and

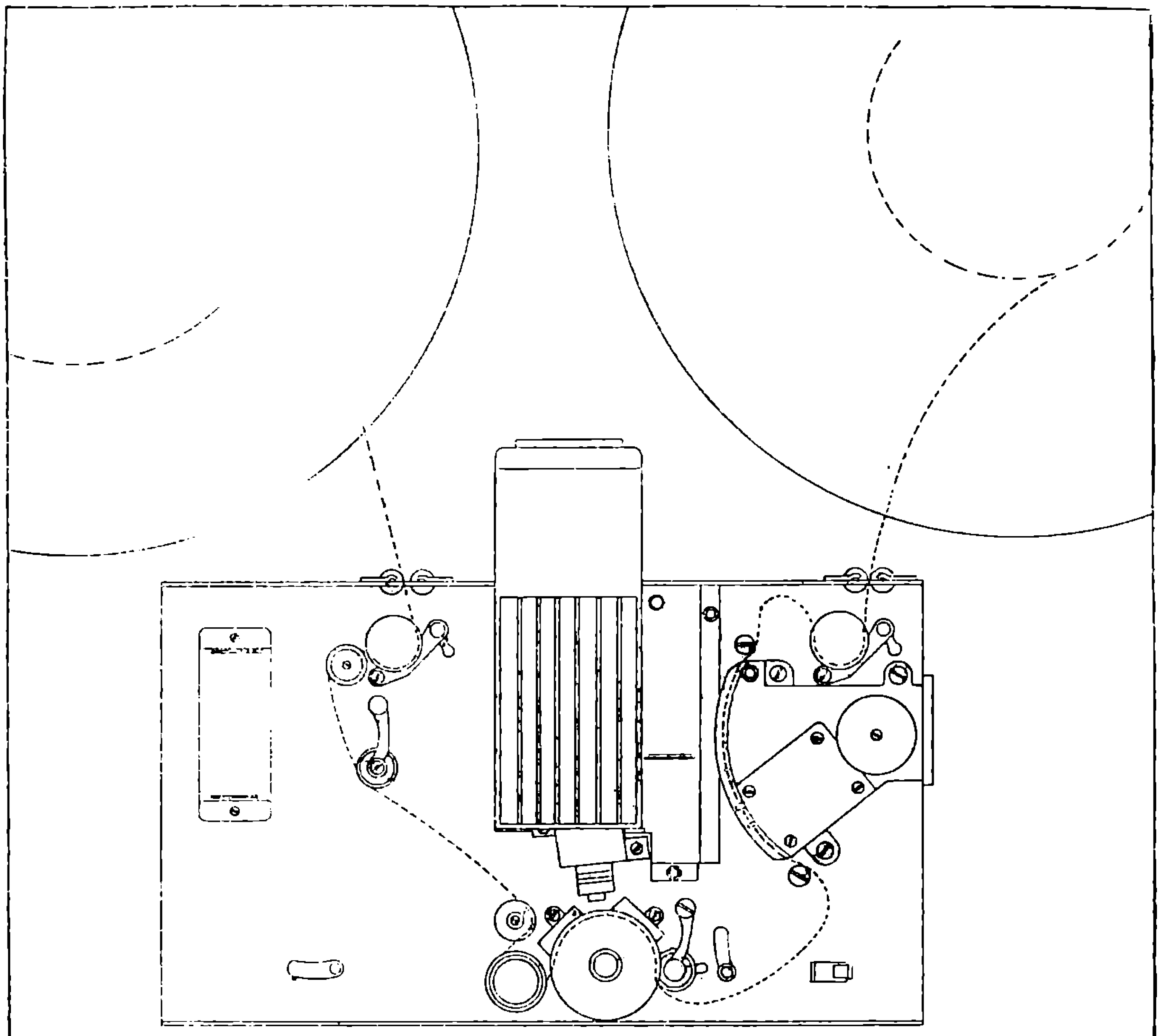

LACING CHART for Model L.516.

FIG. 22

The path of the film through the machine can be followed from the spool at the top right. Notice the loop between the first sprocket roller and the film guide, and the lower loop which is critical in size if good synchronisation of sound and picture is to be secured. A constant length of film should be travelling through the machine between the two sprocket rollers at the top of the case. If the lower loop is lost the trip switch will cut out the light and stop the machine.

green glass so that the film does not become scorched, and consequently there is produced an ill-lit picture, usually of greenish colour, on the screen. Further, it is a matter of chance whether the shutter of the film stops in a position in which the light is wholly or partially occulted. It is by no means certain whether this device is of any real value. If it is used it should be remembered that, owing to a slight buckle in the motionless film, refocusing is often necessary both when the machine is stopped and when it is restarted. Reversing devices seem to be of occasional value on machines intended for educational purposes and certainly are of more use than still-picture devices.

In order to prevent films, especially silent films, from being put into the projector the wrong way round, some firms use spools which have a square hole on one side and a round hole on the other, and thus they can be fitted to the machine in one way only. On the whole, the spools with two square holes are better, for there is a simple way which will *always* show for certain whether or not the film is correctly put on the machine. The operator should stand in front of the machine, lift from and above the spool a loop of film containing a picture or title which can be recognised. All that is necessary is to look through the *rear ascending* portion of the film, when the picture or words should appear as a miniature of what is desired on the screen.

There are a few points in projection technique which the thoughtful operator will soon acquire. At the start of the projection the light and sound should be turned off. It is irritating to see inverted figures and reel numbers appearing on the screen. The light should come with the title, or with the first pictures if there is no title. The sound should be turned up from zero; it is very nerve-racking to hear a sudden burst of sound which subsequently has to be reduced. It is equally disturbing to hear the sound reappearing and rising in pitch when a film starts from rest and picks up speed. The film should be framed and adjustments should be made from time to time to prevent any portion of the

bottom of the picture appearing at the top, and vice versa. The 'tone-control' should be sparingly used. It cuts off the higher frequencies of the sound. As these are not greatly in evidence in the actual recording of 16 mm. film, it would be unwise further to reduce these valuable constituents of the sound, unless the film is so dirty or badly recorded that an unpleasant hiss or scratching noise accompanies its projection.

Many projections of films in school are less effective than they ought to be because insufficient attention has been paid to certain details.

Scattered light reflected from the screen is a frequent cause of trouble. If there is a sufficient quantity of light-coloured or reflecting material in the room, light which comes back from the screen will do much to nullify the worthiness of a black-out. The walls and ceiling of the room need not be painted black but preferably they should have a dark colour: and a flat neutral-grey with a matt surface is quite satisfactory. If the ceiling is white and no modification is possible it may be feasible to make a short artificial ceiling just above the screen by using a length of black-out material which stretches for a yard or more towards the audience.

In a room with a horizontal floor the screen should be at such a height that the children at the back do not need to crane their necks. The size of the picture should be arranged so that its edges are absorbed by the black-framing surrounding the screen. A well-designed projector should not produce an irritating glare but, if it can possibly be arranged, it is most convenient to project from a small room at the back or from an operator's box, which will trap the noise of the machine and extraneous light and, moreover, will enable the operator to work in a certain amount of light.

On many types of school projector it is possible to rewind the film under the power of the motor and with the lamp turned off. This is not recommended and the geared hand-rewinder is both quicker and easier to use. Also the film can be inspected more

easily for damaged joints and perforations. It should be pointed out that most film-library authorities prefer the film to be returned to them without rewinding, so that they can assess the condition of the film after its use by the borrower. We have already mentioned that film should be wound with its emulsion or dull side outwards. As there is no uniformity in the design of spools, or in the direction of rotation of take-up spools, the following rule will always suffice to ensure that the film is rewound in the correct way. ' With the handle on the right and the full spool on the left, with the sprocket holes away from the operator, start with the emulsion on the outside, i.e. on a convex surface.'

It is sometimes necessary to join lengths of film, an operation known as *splicing*. Splicing is necessary when a film is damaged. Then one or more frames are cut out and the film is joined. In order to save frequent replacing of short reels of films, these may be spliced together and wound on a single large spool. In splicing, a small length of film is overlapped so that sprocket holes correspond perfectly, the emulsion is removed from one piece of film for a distance of about 1/10th in. and the films are united by the use of film-cement. Straight splices are now almost universal, but formerly diagonal splices were sometimes used. A well-made splice is stronger than the film itself. A film-splicer is to be regarded as a necessary part of the complete equipment for projection, but for many years the writer made satisfactory splices with a steel straight edge, an old razor blade and a bottle of film-cement. A film-splicer simplifies the operations and holds the film fragments in the correct position for joining. The ends are cut at right angles to the length at a distance of .025 ins. beyond a perforation, the emulsion is scraped away from a rectangle .1 in. broad and equal to the width of the film in length. The film-cement is then applied in minimum quantity and then the two ends are held together until union has taken. The splicer will secure correct alignment of the pieces of film; but if the operation is performed without a splicer the straight edge will help to secure this.

In order to obtain the best results some care should be taken to find the best position for the loud-speaker. This should be as near to the screen as convenient so that the illusion of sound coming from the picture can be preserved as far as possible. It should not be placed in a corner which will cause curious reflections and give a bad distribution of the sound, but it is better to place it at the level of the middle of the screen and not too near the floor. The loud speaker should not be placed near a resonant wall or other structure which will reinforce certain characteristics of the sound, and so produce distortion. Faults due to over-reverberation in an empty or nearly empty room may be corrected when it is full. Poor sound cannot be improved by .turning up the volume. If this is adequate it is unwise to increase it. Rarely can the sound from a poor optically-reduced 16 mm. sound track be improved by using the ' tone control '. Success cannot be achieved in some rooms unless they are acoustically treated. These matters should be considered when new schools are designed and built. Sometimes over-reverberation may be corrected by draping the walls with sound-absorbent fabric. Only trial and error will serve to show the position and size of this.

Some Technical Considerations in the Use of Films and Projectors

1. The optical parts of a projector must be kept clean and it is better to keep the projector free from dust and dirt by constant care than to leave thorough cleanings until efficiency is severely impaired. We have already mentioned the manner of cleaning lenses. The sound-head has a small but highly critical optical system and a speck of dirt or film-emulsion which may interrupt the tiny beam of light, which scans the sound-track, will render the machine dumb. Dust should be removed by blowing, and larger particles with a camel-hair brush. Before adjustments are made to the amplifying and loud-speaker circuits the possibility of this cause of the failure of the sound should be considered.

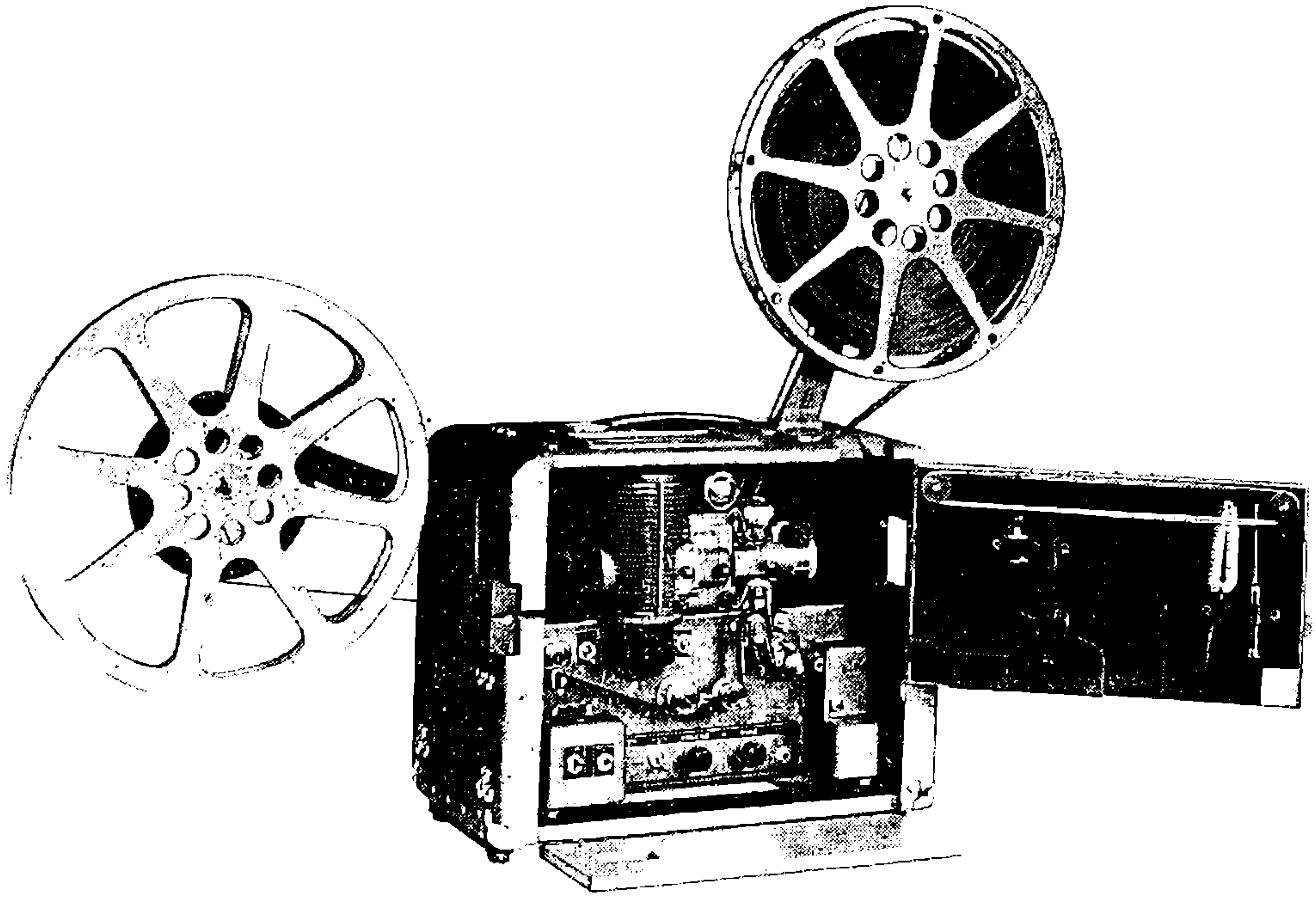

Plate V

The Bell and Howell-Gaumont Model 601 fitted with 1,600 ft. spools. The amplifier is in the same case as the optical parts and is at the base.

PLATE VI

A simple epidiascope used in American Schools, with wheeled stand, cooling fan and foot control of platform leaving the hands free for the adjustment of pictures or other objects (American Optical Co., Buffalo, U.S.A.).

2. All machines are supplied with instructions for their maintenance. Oil should be applied at the oiling points given in the oiling diagram. The oil should be of the correct type and over-oiling should be avoided.
3. A full set of spares including valves, P.E. cell and two projection bulbs of exactly the type used in the machine should be available. (See the notes on projection lamps).
4. In the case of failure of the machine to function when it is switched on, it will be necessary to trace the failure from the point where the current is tapped. If current is reaching the machine the pilot-light, and usually the amplifying valves, will be working. If these are working and the projector bulb does not light up the trouble must be sought in
   (*a*) a failure of the bulb.
   (*b*) a bad contact of the lamp in its socket.
   (*c*) a failure of its resistance or transformer.
   (*d*) other loose connections.

In the event of apparent amplifier failure, when current is reaching the machine (i.e. when the main supply is correct, the fuses are in order, all plugs are passing current and there is no fracture in a cable) a valve may need replacing. More serious troubles may be due to the failure of an amplifier resistance or condenser and usually this is a task for a service-engineer or even for the makers of the machine.

Routine checking of all plugs to see that the wires are not fractured and are firmly screwed to the internal terminals will save considerable embarrassment when projectors have to be erected to give shows at short notice at a later date. The following notes issued by the Central Film Library summarise the chief points which should be observed in the care of films.

All films are carefully examined after each booking before being despatched again. Records are kept of the exact copy numbers of the films sent to each borrower. Borrowers who damage films must return them to the Library immediately with full explanation. Any borrower

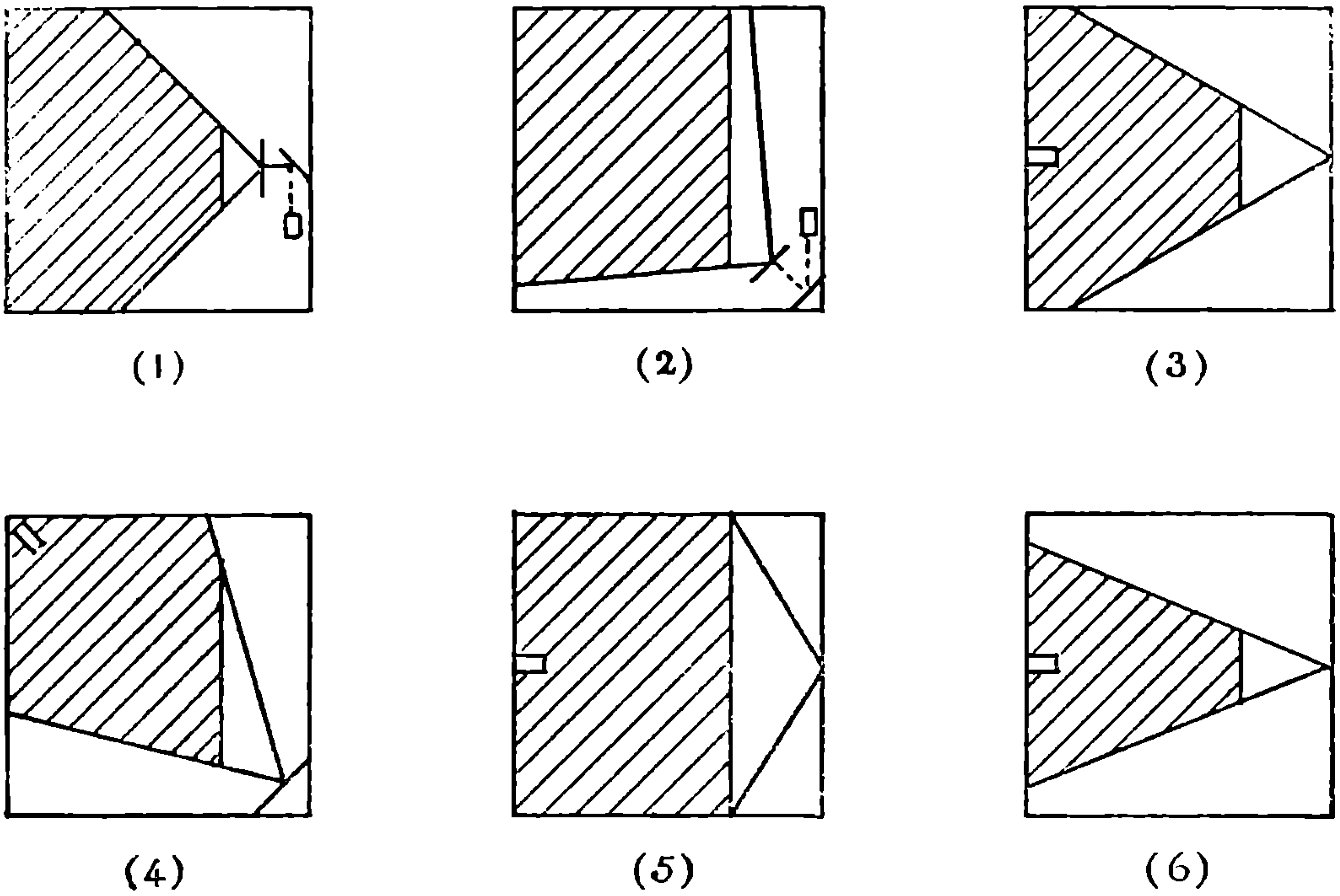

FIG. 23

ARRANGEMENTS OF SCREENS AND AUDIENCES

(The shaded part represents the floor space occupied by the audience.) 1 Translucent screen with centre position and mirror 45° to screen. 2 Translucent screen corner position. 3 Silver or glass-bead screen, centre position with poor reflection at extremes. 4 Bead screen corner position. 5 Matt white screen centre position. 6 Bead screen, centre position.

who receives a film in faulty condition should return it at once and not attempt to use it.

Borrowers are asked to observe the following precautions against damage :

1. *Sound* films *cannot* be used on a *silent* projector. Attempts to do so will damage the films beyond repair.
2. The projector gate and film channels must be carefully cleaned before each show. Use a 'softer than metal' scraper to remove emulsion deposits and other matter which will cause scratches to the film.
3. Dust scratches film. Protect the projector from dust when not in use and *never* allow films to trail on the floor.

4. When threading, be sure to allow sufficient loop above and below the gate and see that the sprocket teeth have engaged the film properly. Negligence will result in torn or strained perforation and edges. This cannot be repaired and the copy is ruined. After threading the film, turn the projector over slowly by hand *before* switching on the motor. Incorrect threading may then be seen immediately and corrected.
5. Loops can shorten during projection. This is made evident by noise from the projector and 'jumping' of the picture. If this happens, *stop the projector at once* and re-thread.

The Film in the School

The cinema film has certain characteristics which make it particularly useful as an aid to teaching and to research. It produces pictures that move, it can create and build up images on the screen, it has control over time and speed, it can enlarge, and its camera can go where the human eye cannot. Moreover, it can combine the visual and audible, it can use colour, it can develop the pictorial, the graphical and the symbolic, separately or together, to suit its purpose. The cinema is an extremely plastic medium. It offers a wealth of technical devices which should be subservient to the intention of the film, which should promote both cognitive and conative responses. The exploitation of technical device for its own sake is no more satisfactory in film-making than it is in other creative endeavours, whether the primary purposes are instructional or artistic. The language of the film, whether sound or silent, has been created by a number of workers chiefly in England, America, France, Germany and Russia during the last half century. This language has been picked up by the average cinema-goer in much the same way that he has picked up his own language. Consequently, he is not always able to interpret the meaning of ideas expressed to him in 'cinema' language, when he sees a film which is significant as an art work. A good film should be acceptable both from the technical angle and from the nature and treatment of its theme as an artistic unity. The important matter of film appreciation, which should

be taught in schools,[1] is outside the scope of this book, but it is mentioned here because children come to school, having been to the cinema, with a partial and mixed knowledge of the cinema language. Moreover, the makers of many of the films, which are considered suitable for child audiences, have used the technical devices which are more appropriate to adults. A simpler and a more straightforward treatment would have been better. In particular, the subtleties of montage, unusual camera-angles, and time-displacements (cut-backs, etc.) confuse many children. Lessons on film appreciation in schools would lead to a discussion of the value and use of the technical devices which are available to the film-maker and are the raw material with which he builds up the language of the film. This should give the child a better equipment for his study of documentary and more elaborate educational films. Before embarking on the making of an educational film the question should be asked, ' Can the teaching material be dealt with adequately by any other means ? ' A filmstrip can be made for a few pounds or less, but a short documentary film with sound may cost several or even many thousands of pounds, if it is made commercially. A monochromatic 16 mm. silent film made by the teacher, or as a school project, is not much more expensive than the cost of the film; and a few pounds will suffice for a 5 to 7 minute film. 16 mm. colour film is two or three times as expensive, but a satisfactory ' short ' can be made for £10—£15. (There is no advantage in using colour if the subject can be treated monochromatically.) Often a filmstrip will suit the teaching need of a particular subject better than a cine film.[2] Moving films should move, and although it must be admitted

[1] Only then will adult audiences become more critical of commercial films and consequently there will be an ultimate demand for a larger number of ' intelligent ' films. A list of books on film appreciation is given at the end of the present work.

[2] The writer gives it as his opinion that the Ministry of Education film ' Houses in History ' is not a felicitous use of cine technique. There were occasional shots e.g. the construction of a medieval house which were cinematic, but for the most part static shots would have sufficed.

that the camera can move while photographing static material and so give a better impression of it than would appear to the fixed eye, it is wise to ask if the expenditure on educational films justifies the result. Good lantern slides and filmstrips will show architectural details much more cheaply and effectively than the cinema. On the other hand by using panoramic (' pan ') and tilt shots, close-ups and scenes which show moving background material, clouds, smoke, human beings, etc., will give a more striking impression than the static picture. The moving camera will give a sense of depth and distance by parallax even without binocular and stereoscopic aid.[1] In spite of all this, teachers and producers must ask themselves just how far the expense of film making is justified by the results, and how the film can be supplemented by other teaching aids. Above all, the film should be used as a tool in the teacher's ' pedagogic chest ' and not as an excuse for a special occasion.

Educational films may be classified as follows (*a*) Background films, such as documentaries which may be used to illustrate a subject generally, to introduce or to revise it. (*b*) Teaching films of ten to fifteen minutes duration. (*c*) Short ' sentence ' films to illustrate single phenomena, etc. (*d*) Cyclic or loop films.

(*a*) The documentary film at its best is not only a presentation of fact, but it is an artistic production with the qualities of *unity in diversity* which should be apparent in such work. It is a typically British product and the best of our documentary films are probably unrivalled throughout the world. Admirable examples are *Night Mail* made before the last war and *Cyprus is an Island*[2] made at its end. The latter is rather long for some purposes, but portions of it may be shown separately to illus-

[1] A good example of a well-made instructional film for adults is ' Your Children's Eyes ' (Central Council for Health Education C.O.I.). It is worth studying from the technical point of view because so many simple devices have been used in it effectively, e.g. focus, models, building up blackboard diagrams, camera-angles, ' close-up ', and ' cut-back ' (revision).

[2] Ralph Keene ; ' We Made a Film in Cyprus.'

trate several aspects of life and work on the island e.g. its history, irrigation and arable farming and the customs of the people. The appeal of *Night Mail* is more ' adult ' than that of *Cyprus is an Island*, but the original ' shots ' of an express mail-train, and interest in seeing men doing a specialised job make an appeal to most children over the age of 11. For geography lessons concerning a Mediterranean island, with the aid of other complementary teaching devices, the Cyprus film is admirable. It strikes a correct balance between environmental and human interest and is not without its sense of humour. Moreover, it is a well-made film in which each shot is significant without any straining after effect. Its story is told without undue haste, naturally and without exaggeration; it begins with the sea washing the shore of the island and it ends in the same way. It contains a great amount of material, too much in fact for direct teaching in a single lesson.[1] The film is a very ' compressed ' medium for conveying information and with the ' quick cutting ' which children like, much matter can be reviewed in a very short time.

(*b*) Short teaching films, of which there are not yet enough, should deal in a straightforward manner with a single unit of exposition. There is usually no need for the use of all the technical devices of cinematography for the production of a film of this type but ' slow-motion ', magnification, the use of the diagram, drawn by a moving-point, may be necessary. Films of this type are useful in many subjects, but particularly in the teaching of geography, history and civics, biology, languages and scripture. In practical subjects such as physical training, games, crafts and speech training such films are of considerable use as a teaching aid. The lesson should be planned so that the film occupies its proper place in the total period of time, and is used in conjunction with the teacher's

[1] The author has seen it upwards of two dozen times and has found further points of interest on each occasion. It enjoys this quality with other art works such as Bach's ' 48 preludes and fugues '.

own exposition, questioning, activity by the class, discussion and 'static' aids. Many teachers prefer silent films to aid them in direct teaching. Such films might show life in a foreign city, the action of an engine, the correct movements of the body in swimming or in playing games (with slow motion), a scene at the Stock Exchange and so on. The film should have some special virtue and should not be permitted to stand in the place of a real demonstration by the teacher or an actual visit to a factory, a museum or a distant town if it is possible to arrange these. Activities and the possibilities of seeing, hearing and handling things directly constitute primary experiences, and no secondary impressions can make up for the lack of them. For instance, it is surely inexcusable to spend money on the hiring of a film on a simple electrical circuit and then to take trouble to project it, when, with a simple electric cell, a piece of copper wire, a home-made contact-switch, and a magnetic needle, the principle could be demonstrated in reality.

On the other hand films showing meiosis and mitosis in living-cells, the growth and movements of plants and animals, will have a definite value, as they show phenomena in a fuller or more intelligible way than can usually be seen in the classroom or garden. Nevertheless, even here the film should be regarded as having only a supplementary function.

(*c*) and (*d*) Shorter films in this class are sometimes called 'Illustration or sentence films' for they show points which would only with difficulty be made plain in other ways. Sometimes a short length of film showing a cyclic process, such as occurs in science and mechanics, can be shown over and over again as a loop. Nor is it necessary to confine this technique to a cyclic process, for looped films, with a simple device to absorb the loop outside the projector, can be used for showing any process where the lesson needs to be 'rubbed in' by repetition.

Dance Kaufmann have a range of such films.[1] (See the sections on science and mathematics.)

The report of the Scottish Film Council 'Sound Films in Education' (1948) makes the following suggestions for the organisation of a sound-film lesson :—

		Minutes
1.	Teachers' preview	5
2.	Preparatory talk	
3.	First showing of film (without interruption)	10
4.	Oral Discussion in Class (with the aim of promoting 'selective seeing')	15
5.	Second showing Film	10
6.	Oral Recapitulation in Class	5
		45 minutes.

This will have to be modified to some extent according to the length of the film.

The Committee agreed that 'where sound is added to sight a greater sense of reality is present' and more sustained interest and attention is attained. This latter result they attributed to the fact that in the case of the silent film the interruptions of the captions tend to break the rhythm and flow of the film, thus dispersing attention and dissipating interest. For similar reasons the Committee deplored the use of musical accompaniments, frequent stoppages in the showing of silent films and the introduction, often inept, of humour in sound films for class-room purposes; while on the use of dialect in commentary they observed its strong appeal to the children, and its marked effect in securing the human touch. (Nevertheless in view of the difficulty of readily understanding some speech in dialect its place in sound-film presentation remains to be determined by subsequent investigations.)

[1] The Board of Education Pamphlet No. 115 (Optical Aids) gives several simple methods of dealing with the loop in these short continuous films.

'Sound pictures are preferable where natural sound gives increased reality to visual impression, also, particularly in the exposition film, where the commentator is a recognised expert and the methods employed are not available in most schools. Where neither natural sound nor commentator adds much to the message of the film the silent version is better. Each case should be considered on its own merits.'

The Report states that sound-films seem to stimulate backward children, but it is quite evident that more research is required in this matter and that special films will have to be made with the particular needs of such children in view.

Sound or Silent Films

The Scottish Film Council (1948) have the following suggestions to make in favour of the silent film :—

1. 'The sound-film gives visual illustration in a less direct and unmixed form.

   'There is an objection to asking the child to look and listen simultaneously as one or both of these activities may suffer.

   'The well-produced silent film carries a minimum of verbal direction and explanation. The child who sees such a film is not to the same extent subjected to the strain of dealing simultaneously with pictures and words as he is with the sound film.

4. 'The presence of a commentary tends to remind the person seeing the film that he is not dealing with reality. When commentary is absent the spectator has a greater illusion of reality and therefore the film makes a greater impression upon him. It is partly in order to overcome this difficulty that the commentator is sometimes brought into the film as a character so that his remarks can be introduced naturally.

5. 'Unless great care is taken the emphasis of the commentary may differ from the emphasis of the pictures and both from the emphasis desired by the teacher, thus producing a feeling of confusion.

6. ' Children in the act of concentrating on the picture tend to ignore the commentary.
7. ' The commentary appears to dispel in some degree the desire that children normally have to speak about the film that they have seen.'

The Council summed up the matter as follows :—

(*a*) The sound film costs more.
(*b*) Projectors are more expensive and more unwieldy.
(*c*) More skill is required from the operator.
(*d*) Acoustical difficulties arise in some rooms.
(*e*) Inferior reproduction of sound is sometimes obtained from sub-standard sound track.
(*f*) The sound film is more liable to damage than the silent film and such damage has more serious consequences and is more expensive to repair.
(*g*) The spoken commentary frequently imposes greater restrictions on the teacher who uses it than the silent film (e.g. the form of the lesson is more precisely dictated).
(*h*) The commentary restricts the range of usefulness of the film by narrowing down the age-limits within which it may profitably be used.
(*i*) The voice and accent of the commentator may, by their unfamiliarity, cause misunderstanding or loss of attention, especially among younger children.
(*j*) The presence of commentary tends to put a film in the category of those ' that tell all '. Such films give the child a mass of information without evoking any effort on his part. He has little or no opportunity to exercise his powers of deduction or investigation. This learning is passive and so less valuable. It is true, of course, that this might to some extent be obviated by the use of a carefully prepared commentary, designed to arouse curiosity and to direct attention, rather than to tell everything.

Conclusions

Within the limits of their experiment it would appear that the silent film with teacher's commentary is a more effective aid than either the sound or the silent version of the same film, provided that the teacher has a sufficient knowledge of the film and his commentary is well prepared beforehand. Although the sound-film has advantages over the silent film when used for background purposes, there is no foundation for the frequently made statement that the silent film when used as a teaching aid is regarded as unattractive by children accustomed to the commercial cinema. The direct teaching film should be shorter than those generally issued at present. The Report called for further research 'to determine empirically the fields in which the sound film is essential compared with those fields which require the silent film.'

In spite of the Scottish Committee's stressing of the virtues of the silent film, the American tendency is to use sound-films more and silent films less. Short films would tend not to need sound, but the longer film is conceived by its makers as an audio-visual whole. The notes on the investigations are given here to show how great is the need for further research embodying teacher, film-maker and subject-expert.

We now give a summary of a preliminary research on films in school, undertaken by the National Foundation for Educational Research with the assistance of the National Committee for Visual Aids in Education.[1] The opinions of 450 teachers concerning certain aspects of the use of films in schools (1949), were considered.

Optimum Lengths of Films

Primary Schools: Teaching films 7—14 minutes. Background films, 10—22 minutes.

Secondary Schools: Teaching films 7—17 minutes. Background films 13—30 minutes.

[1] The bulletin from which this information is taken is obtainable from The Secretary, National Committee for Visual Aids in Education, 79 Wimpole Street, London, W.1.

The value of very short teaching films was recognised. The opinion of both primary and secondary teachers was that the teaching film should occupy about one-third of the lesson time and that the background film should take about two-thirds of the lesson in primary schools and rather more than half in secondary schools.

INTELLIGIBILITY OF TECHNICAL DEVICES

(*a*) *Close-up.* Close shots were considered suitable for secondary school children and less markedly so for primary school children. A clear majority, however, considered close shots suitable even for children of seven.

(*b*) *Sudden changes in camera distance.* The majority considered that these do not cause difficulty to secondary school children. With regard to primary school children opinion was divided.

(*c*) *Unusual camera angles.* These were not considered suitable for younger children. About their suitability for older children opinion was evenly divided.

(*d*) *Slowed movement.* This was on the whole considered suitable for children of any age.

(*e*) *Speeded movement.* This presents greater difficulty than slowed movement, though less markedly so for older children. A majority considered it to be unsuitable for children of seven and eight years.

(*f*) *Photomicrography.* This was on the whole considered suitable for children in secondary schools. Among primary school teachers there was a balance of opinion against its use with children of seven and eight, almost equal numbers for and against in relation to children of nine, and a definite majority in favour of its use with children of ten and upward.

(*g*) *Close-shots* were considered to be particularly useful for showing biological detail, mechanical detail and manipulative detail.

Technical Devices. About a quarter of the primary and one-third of the secondary teachers thought that films employing a

minimum of the technical devices listed above would appear uninteresting to the children, but the majority in each group was of the opinion that such films would be acceptable.

Shot Lengths. About three-quarters of the primary and half of the secondary school teachers thought that shots in existing films were on the whole too short.

Captions. About 85 per cent of primary and 90 per cent of secondary teachers considered captions to be helpful in silent films. With regard to sound films, over 60 per cent thought captions helpful, but over 60 per cent also thought them unnecessary. In the secondary schools over 70 per cent thought them helpful and over 40 per cent thought them unnecessary.

Recommendations for length of captions were :

Not more than six or seven words for children of seven years.
Not more than eight or nine words for children of eight years.
Not more than twelve words for children of nine years.
Not more than sixteen words for children of ten years.
Not more than eighteen words for chilren of eleven to fifteen years.

Lettering. Cursive was generally regarded as unsuitable. The balance of opinion was in favour of script rather than block for the primary schools, and markedly in favour of block for the secondary schools.

Visual and Commentary. It was generally considered that children of seven may not be able to follow visual and commentary together. Opinion was divided with regard to children of eight but definitely affirmative for children of nine and upwards.

Commentary. The balance of opinion was against continuous commentary, but 38 per cent of primary as against only 6 per cent of secondary teachers approved of it.

Natural Sound. Among both primary and secondary teachers, the use of natural sound was widely approved for both teaching and background films.

Animated Diagram. Opinion was slightly against the use of

animated diagrams with children of seven years, and almost equally balanced regarding those of eight. Nearly 80 per cent of primary teachers thought it suitable for children of nine, and over 90 per cent for children of ten. Among secondary school teachers only 60 per cent were in favour of the use of animated diagrams with children of eleven to thirteen, nearly 70 per cent with children of thirteen to fifteen and over 80 per cent with children of fifteen and upwards.

Teaching Notes. More than 95 per cent of those replying made use of Teachers' Notes accompanying films, and the primary and secondary teachers showed close agreement of opinion on the material to be included in the notes. About 95 per cent appreciated the inclusion of a summary of the film. Between 80 per cent and 90 per cent approved of the inclusion of commentary with lists of visuals, additional information and lists of other visual material on the subject of the film. Only about 75 per cent wished for a bibliography, and just over 50 per cent appreciated suggestions on how the film might be used.

The Acoustics of Projection Rooms

Practised speakers and teachers get used to rooms which are difficult for sound and modify their voice-production accordingly but the loud-speaker cannot do this. Each room and audience must be considered separately. A room or hall which produces disturbing reverberations of the sound when it is empty may be fairly satisfactory when it is filled with people. (In the large commercial cinemas the total amount of sound-absorbing surface is not greatly different whether the building is full or empty, but in the case of halls with straight, hard walls, flat or barrel ceilings and uncovered wooden or concrete floors the period of reverberation is considerably reduced when audiences are present.) If possible ceilings should be ' broken up ' and long lengths of flat wall should be avoided in rooms which are to be used for sound reproduction. Sometimes bad acoustic conditions can be im-

proved by covering a flat rear wall with acoustic plaster, acoustic board or even absorbent drapings, heavy curtain-material, etc. Many buildings show selective properties for different sound frequencies, and it is the work of an expert acoustical engineer to 'adjust' a room by suppressing its tendency to amplify certain frequencies and increase the reflection of others. In bad cases some improvement can be effected by draping curtain and heavy fabric round the walls, hanging a piece of such material as an awning above the loud-speaker and below the ceiling; or the placing of a piece of felt or similar material on the wall behind the loud-speaker may help. When there is a preparation room or other chamber behind the front wall of the room or hall, it may be possible to use this wall as a large baffle for the speaker, by arranging that its front face just fits into a square hole in the wall. If the arrangement is to be a permanent one it is a great convenience to have the wiring from the speaker to the projector made permanent and put out of sight.[1]

Some teachers keep their projectors on stout wooden stands which are wheeled from one room to another, and then can be firmly fixed on the floor where required. Such stands should be rigid, fairly heavy and high enough to enable projection to be made over the heads of the audiences. The base-board of the projection-stand should have a tilting device, worked by a screw, so that the picture can be adjusted for height on the screen. This can usually be done by tilting the projector, but to effect the movement from the stand is more satisfactory. It must be remembered that the centre of the beam should be at right-angles to the screen, or nearly so, otherwise keystone distortion will result. It is convenient for the operator to have immediate control of at least some of the normal lights of the room. Many of the difficulties arising from the use of opaque screens, because the teacher-operator has to stand at the back of the class, can be obviated by the use of rear-projection. When sound projectors are set up

[1] Hope-Bagenal: Designing for Good Acoustics.

temporarily it is necessary to take care that cables are placed in safe positions. A few turns of a cable round a heavy table leg will prevent damage being done to a piece of apparatus if the cable is inadvertently pulled or tripped over. Some operators join lengths of cable with male and female plugs, so that if undue sudden force is given to the cable the circuit is broken when the plugs come apart. Operators who have to use their projectors in many different rooms carry an assortment of plugs and adaptors joined in pairs with short lengths of cable so that they can obtain electric current from any plug or holder. All electrical apparatus should be earthed; some operators work under unsafe conditions because precautions have not been taken in this matter.

Ventilation and Black-out

One of the chief difficulties in the use of a ' blacked-out ' room is that the atmosphere often becomes close and stuffy, and in a small room this is accentuated by the heat of the projector. Rooms which are designed for frequent projection-work should have adequate ventilation, and if necessary, airducts with motor-fans should be built into the walls or windows. A considerable part of the possible valuable effect of projection methods is nullified if passivity and torpor are induced by a dark room with a fetid atmosphere. An electric fan will do something to relieve the distressing effect of warm, still air but it must be regarded only as a means of improving conditions temporarily. If complete black-out is not required ventilation can be readily secured. Some rooms are only suitable for very short sessions of projection in complete darkness. When visual methods are introduced naturally as a part of a lesson it is not likely that complete black-out will be required for a long period. It is possible to provide ventilators with circular fans and electric motors arranged in upper window panes and to draw vitiated air from the room.

Where a complete black-out is required, as it will be for most cinema and episcope work, stout black blinds, which draw from

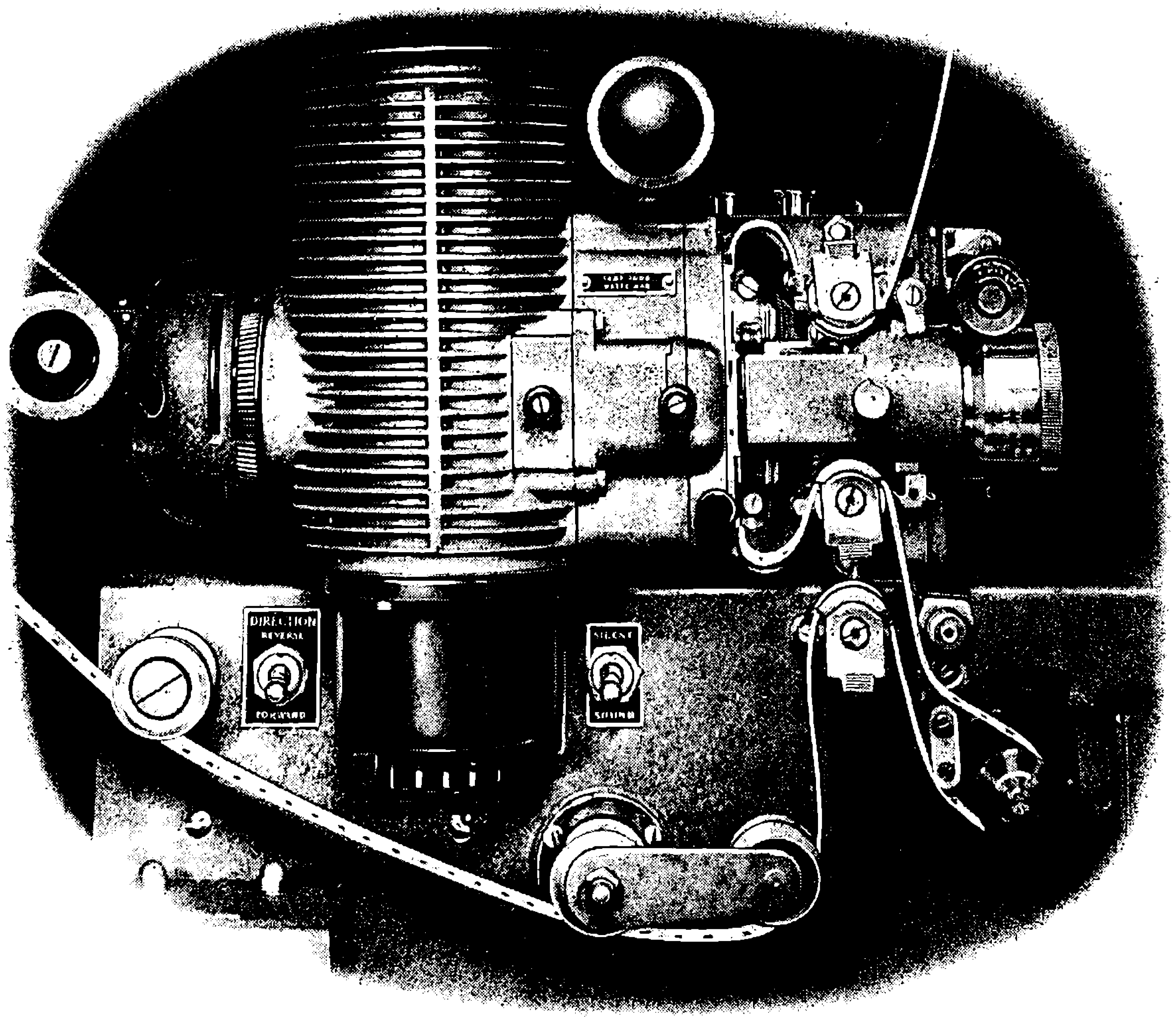

PLATE VII

The path of the film through the Bell and Howell G. B. projector 601. Notice the loops above and below the projection gate, and the sound drum where a narrow beam of light scans the sound track in the bottom right hand corner.

PLATE VIII

Projector with Sub-illuminator for showing a magnetic experiment on the screen. This can also be done with universal lantern or episcope. The Aldis Belshazzar projector, though not illustrated here, is another example of such a machine. In operation it is rather like a periscope in reverse, for any message, etc. written on the transparent disc of the base-box is projected over the writer's head on to the wall, screen or other surface. Complete darkening of the room is not necessary.

the bottom and work in slots, are desirable. The top of each window should have black pelmets. Light which comes through an inadequate black-out may be reflected from a white ceiling or wall. A grey or blue-grey colour for ceiling or walls will go far to prevent this. On the other hand, if each blind fits properly and is framed by the wooden slot on each side and, further, if these are painted dull-black inside and out to make an effective light trap, a good black-out should result. Heavy, dark curtains on runners placed slightly above the top horizontal frame of the window, so that two curtains can draw together and overlap generously at both sides, will produce a reasonably good black-out. For smaller windows, tight-fitting frames of wood, over which is nailed roofing felt, such as were used in war-time, can be made and applied to the windows either externally or internally. Many defects at the sides of a black-out arrangement can be overcome by painting the window frame a dark colour. Blinds which draw from the top and have side supports are usually quite inadequate. If they give tolerable results at the start, they soon warp and any slight ventilation through the window causes them to flap in and out. A varying unwanted illumination, under these conditions, is more irritating than a consistently poor black-out. When it is necessary to do the best in circumstances of poor black-out, shafts of light making their way into the room should be absorbed, before they fall on reflecting material, by the use of dull-black fabrics.

FILMS AND THE FILM IN EDUCATION

The Cinema in School, George, Pitman.
The Film in the School, Ed. Lauwerys, Christophers.
The Film in Schools, Arts Enquiry, P.E.P.
The Education Talking Picture, Devereux, University of Chicago.
The Sound Motion-Picture in Science Teaching, Rulon, C.U.P.
Cine-Biology, Burden, Field and Smith, Pelican.
Film, Manvell, Pelican.

The Art of the Film, Lindgren, Allen and Unwin.
Film, Arnheim, Faber and Faber.
The Factual Film, Arts Enquiry, Oxford University Press.
The Film Sense, Eisenstein, Faber and Faber.
A Grammar of the Film, Spottiswoode, Faber and Faber.
The Cinema To-day, Spencer and Waley, O.U.P.
Documentary Film, Rotha, Faber and Faber.
Grierson on Documentary, Grierson, Collins.
Informational Film Year Book, Albyn Press.
Film Making from Script to Screen, Buchanan, Faber and Faber.
The History of Motion Pictures, Bardeche and Brasillach, Norton.
Film and Theatre, Nicoll, Harrap.
The Value of Films in History Teaching, Consitt, Bell.
The Cinema in Education, Marchant, Allen and Unwin.
Going to the Cinema, Buchanan Phoenix.
Children and the Cinema Report No. Cmd. 7945 (The Weare Report), Ministry of Education, H.M.S.O., 1950.
Children and Films (The Carnegie Report), Field, Carnegie Trust, 1954.
Good Company, Field, Longmans Green.
Children's Cinema Clubs, Woodhouse and Parnaby, B.F.I., 1947.
Adolescents and the Cinema, Birmingham University, in 'Educational Review,' Oct. 1948—Feb. 1949.
Films and Children, Hills, B.F.I., 1951.
Are they Safe at the Cinema? Hills, B.F.I., 1953.
A Psychological Study of Film Production for Child Audiences, Petroleum Film Bureau, P.F.B., 1952.
The Child Audience, Bauchard, UNESCO, 1954.
The Entertainment Films for Juvenile Audiences, Storck, H.M.S.O., 1954.
Sociology of the Film, Mayer, U.L.P., 1946.
British Cinemas and their Audiences, Mayer, U.L.P., 1948.

CHAPTER VII

VISUAL METHODS AND THE CURRICULUM

'When the educational powers of the cinema have been adapted to visualising the use of mathematical symbols, anything which can be achieved by books and blackboards will seem trivial by comparison.'

L. Hogben.

IN this section no attempt has been made to give details of all possible visual aids to the teaching of every subject in the curriculum. The aim has been to take certain subjects and show that visual treatment will increase their significance. In particular, the visual language has been shown to be a convenient way of expressing the ideas peculiar to certain subjects, to show their relationship to other subjects and to point the way to a synthesis of studies. The broad principles which have been given for the study of particular subjects apply equally well elsewhere in many other cases.

ARITHMETIC AND MATHEMATICS

Recent years have seen a change in the teaching of arithmetic and elementary mathematics. These subjects have become more realistic and practical and are related not only to everyday things but to the life of the pupil. Although this would seem to be an obvious necessity it is sometimes still overlooked and arithmetic is taught as a discipline, to give facility in using figures, or as a type of magic wherein certain processes are taught by rote and certain results are obtained if the rules are adhered to. It is probable that the next decade or two will see a revolution not only in the content and treatment of the mathematics syllabus but in our fundamental conceptions of the nature of mathematics. A. N. Whitehead, philosopher and mathematician, classified ideas into

two categories: those which are sterile and do not lead to any extension and fertile developments, and those ideas which are fecund and generate long sequences of further ideas. It is essential that in mathematics-teaching our ideas should be capable of starting chains of other fruitful ideas. Mathematics grew up through the efforts of those who were trying to find means of describing and measuring things in precise ways. The history of the subject ought to find its place in teaching, both to emphasise that it is rich in human values and also because the stages of its development historically can often suggest a method of approach to the child mind. A knowledge of the history of mathematics on the part of the teacher is bound to have a satisfactory effect on the whole outlook on the subject and how best to teach it. With the realisation that mathematics is a language, or rather a number of languages, and that it has grown up by human endeavour to describe things quantitatively, many difficulties are resolved, and the application of the language of visual symbols is at once apparent.

Originally, the simplest of algebraical equations was expressed and solved in the form of words only and even the known and unknown quantities were written in full verbal terms. This was known as rhetorical algebra. As time went on, certain symbols were used instead of words; later, symbols were not only used for the known and unknown numbers but also for the operations which were carried out with the numbers. Finally, it was possible to extend the use of symbols to make new types of numbers which were not directly related to the familiar arithmetical type. Thus, algebra grew from rhetorical to syncopated and finally to symbolic algebra. Just as words can be built into larger units with a grammar, so also there is a grammar of algebra, and algebra should be considered in its relations to logic. There are other algebras according to the nature of the numbers we use and the 'rules of the game' (that is, the way the operators may be used). The numbers may be thought of as nouns and the operators as verbs. This is a very general observation and the analogy is

not to be pursued too far. The meaning and use of symbolism lies at the heart of algebra.

Mathematics has often been taught as a number of separate subjects, and the relations between geometry, algebra, trigonometry and arithmethic have not always been apparent. Each is a tool in the chest of simple mathematical analysis, but also, each is a language which can be translated into terms of another. Thus, graph-drawing and co-ordinate geometry should suggest a bridge between algebra and geometry. The generalisations of arithmetic should be expressible in terms of algebraical formulae.

The consistent symbolism of algebra has inspired workers in other fields to adopt simple, tidy and logical symbolisms for their own subjects, whether these are scientific, historical or geographical.

The arithmetical and algebraical truths which can be expressed in the form of histograms, graphs, models and geometrical figures have pointed the way to a new synthesis of ideas and the possibility of translating one language into another in terms of mathematics.

Mathematics has become increasingly not only the language of science but also of everyday life. The need for quantitative as well as qualitative forms of expression is becoming greater every day in view of the mechanisation of life and the machinery of planning. The symbolic language of algebra is not for everybody, and statistics relating to large numbers are often misread, rejected or unheeded by many. Is it too much to hope that intelligent teaching of arithmetic will remedy this in the future?[1] Pictorial and other visual methods will sometimes make statistical matter plain to the mathematically illiterate. Graphs, histograms, sector diagrams, pictographs, the moving line of the film all have their uses. Nevertheless, to the mathematician the chief interest of the visual approach is that he is dealing here with the relations between two languages: the mathematical and the visual.[2]

[1] L. Hogben, *Mathematics for the Million.*
[2] G. P. Meredith, *Algebra by Visual Aids.*

Visual methods have been used in elementary mathematics teaching for some decades. Geometrical diagrams using coloured lines and masses, conic-section models, three dimensional models of the simple geometrical solids such as the tetrahedron, large scale slide-rules, mechanical models of many types, blocks and bricks for showing algebraical factors of expressions to the third and second powers, the completion of the square for solving quadratic equations, the solution of cubic equations, methods of finding the areas enclosed by curves have all been done by visual and practical methods.

Here are some further suggestions of topics for visual treatment :—

1. *Direct Experience.* Visits to observatories, museums, business offices where accounting is done, weights and measures-testing stations, optical and other precision instrument makers, counting and grading machines, computing laboratories, generating stations and other works where quantitative estimations of output have to be made. Practical work in surveying, estimating quantities, estimating population figures, economic surveys, 'sampling' and sample polls. The making of maps and map projections.

2. *The Cinema Film.* From the time of Newton and Leibniz, methods were evolved so that mathematics could deal with the problems of motion or other changes which take place with respect to time.[1] Thus grew up the differential calculus which was able to find the rate of change in one variable which was related to or varied with an independent variable, according to a given law. The graph is an excellent and simple way of dealing with such changes in a moderately accurate way. The trends of the graph up or down are easily seen and the general shape of the graph can easily be interpreted. Nevertheless, the graph must not be thought of as a static line, but as the result of the description of such a line by a continuously moving point, constrained to

[1] W. L. Sumner. *The Teaching of Arithmetic and Elementary Mathematics.*

move in a particular way, because the vertical and horizontal components of its motion are related together in a particular manner. It is here that the film or the cunningly made filmstrip is of value. We can see the graph in the process of construction; we can see the nature of wave-form, rhythmic and cyclic changes. Animated diagrams are a very useful help in the teaching of the ' calculus '. Mechanics becomes real when it is taught in terms of practical work on a large scale, and when things move, as they do in dynamics, the subject is more interesting to children who have no natural ability in mathematics. Although the secondary experience of the film should never be allowed to stand in place of direct, purposeful experience, or even the contrived experience (' mock up '), it is useful both for teaching and revision purposes.

More films should be made which show the applications of mathematics to modern problems, e.g. grading of abilities, personnel selection, scientific measurement, prediction and probability. The problems of ' normal distribution ' can be shown very well by means of a film.

Filmstrips have been used successfully for teaching the history of mathematics, its applications in life, and even certain of the processes of algebra and geometry. In the last case, further blackboard work by the teacher and class activity are required. The filmstrip is a good and cheap means of showing a process which develops in stages by the addition of lines or symbols. By using projection without complete blackout it can become a pleasing alternative to blackboard work, but it must never be allowed to replace real effort and practice on the part of the class.

Some films just seek to animate the text-book but others extend this and show the applications to real life. Probably the best teaching films at present available are those which deal with topics which are advanced even for the sixth forms of Grammar Schools. Such films are those dealing with differential equations, hypocyclic motion and the generation of involute gear-teeth. Rates of exchange, frequency curves, transfer of power, the theory

of relativity and suitable topics for films and examples are available. The Dance-Kaufmann cycle-films deal mainly with physics but there are several on mathematics: harmonic motions resultant ellipses, resultant circle and straight line. Some excellent filmstrips have been made by Mr. Vesselo on the Football Field, the Bicycle, Introduction to Geometry which are intended as a bridge between the child's concrete surroundings and the abstractions of mathematics. (British Instructional Films and Educational Publicity, Ltd.) Some further strips made by Fairthorne (Common Ground 1947) deal with Laws of Growth, Building Linear and Polynomial Laws, The Exponential Law. Some further information and an account of foreign work appears in the section on 'Films and Mathematics', by I. R. Vesselo[1] in *Science in Films.*

3. *Science.* Visual methods have great application in the study of science. Modern inductive science is based on experimenting and depends on the use of carefully-made observations in which the sense of sight is most important. Many scientific instruments depend on a principle whereby phenomena are made to manifest themselves in terms of the visual sense. We measure temperature accurately, not by means of the feeling of degrees of warmth by the skin, but by looking at the movement of a thread of mercury; electricity may be detected and measured by a mirror galvanometer, the acidity of a soil by colour changes in a chemical substance and so on. If we consider carefully the development of many of the scientists' tools we see that they have aimed at the modification of physical forces so that they can be measured by means of the eye. The microscope, the telescope, the spectroscope, the camera have enabled the eye of the scientist to see things which his mind could interpret, and so advance scientific knowledge.

Before we discuss the more obvious examples of visual illus-

[1] Mr. Vesselo is the Chairman of the Visual Aids Sub-Committee of the Mathematical Association and has done remarkable pioneer work in Visual Aids for Mathematics Teaching.

trations in science work it might be well to ask what are the aims of science teaching and of what real value should it prove to the pupil. Briefly, science teaching should stress scientific method as well as scientific fact, it should deal with the human and historical aspects of the subject and it should try to achieve, sooner or later, an integration of the several branches of science in relation to the broader field of knowledge. Without science we cannot really understand history, and we certainly cannot understand the nature of life in general and the world around us in the complexities of the mid-twentieth century years. Without science we cannot appreciate the working of our own bodies and minds in relation to the environment in which we live. There is this ' background aspect ' of science which is important for everybody. In addition science-specialists will need a more detailed knowledge of a number of the aspects of science. They should know something of the ' facts ' of their sciences, the skills and methods appropriate to their studies.

The scientific worker needs powers of insight and imagination. The imagery which he uses for this purpose is usually pictorial or symbolical. It may be that some of his imagery is too luxuriant to start with, but a carefully designed series of experiments will test whether this is so. Contrary to the narrow views held by some laymen, the successful scientist needs powers of imagery and imagination equal to those of the artist and musician. If subsequently these latter are not prepared to submit their ideas to the same process to which the scientist is forced to submit his, their work is almost certain to be superficial and ephemeral. A good example of this use of visual imagery in developing a scientific theory was Kekulé's ' diagrammatic ' symbolism of the benzene molecule. Kekulé relates how he had wrestled with the problem on the top of a London bus, and had tried to imagine a structural-formula which would account for the stability and other chemical properties of benzene in terms of its six carbon and six hydrogen atoms. He thought of a snake chasing its own

tail, and so the idea of the benzene ring, which has been of such great value to chemists, was evolved. The oft-used familiar hexagon which is made to represent benzene in chemical formulae and equations does not imply that the benzene molecule would look like this, if it could be magnified to such an extent that it would be visible. It merely represents a convenient symbol which can be related easily to many of its chemical properties.[1] When the flat hexagon was seen to be a two-dimensional version of something which existed in space, a three-dimensional model was then made which was consistent with the behaviour of the molecule in combination. This symbolic model or diagram of the molecule is useful for teaching, *but not as an enlargement of actuality*. It is part of a language and can be used consistently to give us a medium for describing what we know about the molecule and for predicting other things which it might do, by reference to its represented nature. It is like a word or words in an argument. It is necessary for us to realise the value and the limitations of this process.

Science has dealt with experimentally discovered facts, and its strength, in the minds of many, has been in what it has achieved in the material world. It is of increasing necessity that the factual aspect of science, whether it is expressed in the form of words, diagrams, graphs, symbols peculiar to it or mathematics should be supplemented by a study of its nature and limitations, in the upper forms of Grammar Schools and in the University. This study will involve a further investigation of the uses of the various languages which the scientist is using in his endeavour to describe natural phenomena. In the last analysis, models of atoms, electrons, and mechanical representations of waves fail him and he is left with mathematical symbols.[2] This is a difficult business and one on which much remains to be said. But at an intermediate stage it

[1] 'Nothing could have exceeded the apparently wild extravagance of de Broglie's first work on electron-waves which led directly to quantum mechanics.' Professor R. H. Fowler quoted by W. H. George, *The Scientist in Action*.

[2] A. Eddington, *The Nature of the Physical World* (*Everyman* edition).

will suffice to show how important is the need for a consideration of the various languages which are employed, and to give real thought concerning their true function, when we try to consider the nature of science in terms of the larger sphere of human knowledge.

In science-teaching, optical aids are usually readily available and may be used :—

(*a*) To complement the work on the blackboard.

(*b*) To show a phenomenon or illustration to a whole class.

(*c*) To give a picture, at a convenient tempo, of a dynamic and changing phenomenon.

(*d*) To give an enlarged image of a tiny body so that all the class can see it at once.

(*e*) To augment or stand in place of a visit to a place of scientific interest outside the class-room or laboratory; that is, to bring the work in school into relation to the applications and development of science in the outside world.[1]

Most of these uses have been indicated already under the appropriate sections concerning projectors and other visual aids.

Films may be used for ' background ' work or for summaries, may have to stand in the place of visits where suitable factories, plants and so on are not readily available in the district. Such films make science more real and show that science is not confined to the laboratory, but has enormous applications in the world. Moreover, many of the social relations of science can be treated well in terms of a film. Such films as World of Plenty, T.V.A. (Tennessee Valley), Penicillin, deal with the applications of scientific principles to present-day problems in an excellent way.

Films and filmstrip may be used for teaching scientific processes, mechanical action in terms of animated diagram and combined picture-diagram. A good short film of this type is ' The Steam Turbine '[2] which compresses a great deal of infor-

[1] *The Teaching of Science in Secondary Schools*, pub. Murray.

[2] A British Council Film obtainable from the Central Film Library.

mation naturally and in an unforced manner, in a running time of a few minutes, and moreover, introduces the subject admirably in terms of its historical development. Films of animal and vegetable life are invaluable for biological work, and short cycle or looped films (Dance-Kaufmann) are useful for the repetitive showing of biological, physical and mathematical rhythmic or cyclic phenomena.[1]

Dale has summarised the value of the cinema in teaching science as follows: Films—

1. Present certain meanings involving motion.
2. Compel attention.
3. Help to clarify the time-factor in any operation or series of events.
4. Bring the past and the distant to the classroom.
5. Enlarge or reduce the actual size of objects.
6. Present a process that cannot be seen by the human eye.
7. Provide an easily reproduced record of an event.
8. Reach a mass audience at a low average cost.
9. Build a common denominator of experience.
10. Offer a satisfying aesthetic experience.
11. Give an understanding of relationships.[2]

Filmstrip is useful in science-teaching to show the relations of diagrams to pictures of apparatus and other objects. Further, the filmstrip can suggest animation in a crude but often satisfactory form, e.g. the strokes of an internal combustion engine, the stage in

[1] In many towns in England there are scientific film societies most of which have direct connections with science teachers in the district. The Scientific Film Association has developed an excellent system of Film Appraisal which might well be studied.

Little need be said here concerning the application of films to science teaching and research, for the matter has been dealt with in ' Science in Films ', ed. by Blodwen Lloyd (Sampson Low). Catalogues of films dealing with various branches of science have been issued by the British Film Institute. See also Catalogue of Films of General Scientific Interest compiled by the Scientific Film Association and published by Aslib, 52 Bloomsbury Street, W.C.1.

[2] Dale, *Audio-Visual Methods in Education*, Harrap.

development and growth of simple life forms, the action of a pump, the stages in the manufacture of gas and other substances, and so on.

The full-size optical-lantern is useful in science lectures and lessons because transparencies of diagrams, tabulated data and graphs can be projected with little or no darkening of the room. The optical-lantern can be adapted, or a Universal lantern may be built up in the workshop so that experiments may be performed on a small scale in front of the condenser, and certain demonstrations can be shown on the screen. It is possible by an arrangement of mirrors at 45 degrees to project transparencies or images of the contents of glass cells placed horizontally or vertically.

Demonstrations of the following can be made in this way :

Biology

Osmosis through parchment thimble.

Living Pond Life—

e.g. Frog spawn.
Tadpoles.
Newts.
Dytiscus beetles, larvae and adults.
Dragonfly larva.
Notonecta.
Corixa.
Water snails.
Fish, etc., etc.
Pond Weeds, to show characteristic features.

Marine life—

e.g. Small Crabs.
Prawns.
Sea Anemones.
Annelids.
etc., etc.

Physics

Magnetism, Lines of Force.
Compass and bar magnet.
Gold leaf electroscope.
Electrolysis.
Surface tension.
Specific gravity.
Flotation.
Refraction.
Light experiments, etc., etc.

Chemistry

Indicators.
Solution and diffusion.
Crystal structure.
Precipitation and solution.
Effervescence.
Small scale experiments using test tubes and tubing, etc., etc.

The value of direct experiences in the form of visits to factories, farms, quarries, engineering establishments can hardly be exaggerated, and visits to museums are almost as important. The Science Museum in South Kensington, London, is unique in England and visits to it should be carefully prepared and should lead to experiment and discussion subsequently. If possible, frequent visits should be made and limited numbers of exhibits dealt with on each occasion. The Geological Museum which is adjacent to the Science Museum is excellent in its appointments and in the methods of mounting its exhibits. There are many museums in London and not all of them are as well known as they deserve to be. This should not blind us to the many useful collections in other parts of the country, which because they are smaller are sometimes more valuable where detailed studies are made. Nor must the value of school museums be forgotten. Useful

permanent collections can be gathered by the children over a period of years, arranged and catalogued and frequently these are the only collections of local interest in small communities and as such are unique and valuable. The development of a good museum is a business for experts but many of our civic museums are showing signs of great improvement during recent years, and are ceasing to be repositories of useless antiques and dusty boxes of stuffed birds. It may seem paradoxical to state that museums should be vital but it is true nevertheless. Museums should show new materials, new methods of presenting old materials, topical uses of existing materials and should take advantage of newly acquired knowledge.

Modern Languages

In his book, *Modern Language Teaching*, Cloudesley Brereton refers to the advantages of a Modern Language room in the school and the disadvantages of broadcast lessons since they cannot be interrupted at the teacher's wish. He urges that optical projection, both static (as in the 'magic-lantern' or filmstrip projector) and in the moving-film, might be more effectively used. Before the talking-film can be safely used as a language teaching aid it is necessary to ensure that the qualities of both the sound tracks and the acoustical reproduction are of a high quality. This is not always the case even when 35 mm. films are employed, and with 16 mm. 'optical reductions' the sound may leave much to be desired. In good circumstances the film may be used as an aid to the teaching of phonetics. Diagrams and 'close-ups' of the head and mouth with the actual sounds produced could be effectively dealt with by sound films. Sometimes pictures and corresponding gramophone records have been issued, but whether the sounds are produced by the use of disc records or by sound-tracks on films, it is necessary to see that they are satisfactory and undistorted at the start and moreover have not deteriorated by the wear and tear of many playings.

Malinowski,[1] writing about the primitive uses of languages, said that they must be ' modes of action and not only instruments of reflection '. Modern language teaching should give the learner the power of dealing with the situations which arise in everyday life in a foreign country. Residence abroad is, of course, the best way of providing the learner with the means of doing this. Where this is impossible, or where such an experience is to be recalled, revised or even anticipated, visual aids, especially the sound film, are very useful. Even with filmstrip and ordinary non-optically projected pictures there is much scope for the teacher. He can devise numerous situations, and build up suitable phrases and vocabulary. Such situations will be suggested by the material which will be found in many school language text-books : shopping expeditions, a picnic, a football match, going to the pictures, a visit to the Opera, the Louvre, a café, an evening at the hotel, on the ship, visiting a family, at once cross the mind. In the early stages, as well as in later years, there should be made an attempt to give the genuine impression of life in a foreign country and not merely the translation of English life to some place at the other side of the Channel. In the same way there should at all stages be some feeling for the ' génie de la langue '. Recordings on gramophone records with pictures, or what is better, sound films of short poems or prose extracts with a visual picture of what is being recited, would serve a useful purpose. There can be little doubt that the future will bring a series of such records suitable for class-room use.

Modern authorities on the teaching of languages seem to be increasingly of the opinion that grammar should not be isolated and taught for its own sake, but should proceed normally as a part of the work of comprehension and expression. This is a reasonable attitude where a leisurely course is in progress, or where an examination syllabus has not to be covered in a short time. On the other hand, there are the demands of the evening

[1] See also M. M. Lewis, *Language and Society.*

school and, at times, the grammar school. Filmstrips, diagrams or pictures are sometimes useful here. The chief grammatical problems such as gender and number, agreements of verbs, participles and adjectives, the object pronouns and their order in a sentence, the use of perfect and imperfect tenses in French, the word order in German sentences and French clauses and so on can thus be dealt with. The pictures should be simple and arresting, and can well be drawn as cartoons. Action and time can be well suggested in this way. It is a pity that no coloured cartoon of the Walt Disney type has yet appeared to deal with this matter. Here are notable and as yet unexplored fields for the teacher interested in both language teaching and visual methods.[1]

In addition, films, filmstrips, pictures, travel maps and picture stories can be used for creating and maintaining enthusiasm and interest for life and work in another country. Films on such diverse topics as the works of Pasteur, Rodin and Matisse are not only of interest because of their treatment of topics in art and science, but because they are typically French in the manner of treatment and have commentaries in that language. Filmstrips dealing with family life, the town and country, the geography of other lands can be used for direct-method teaching and discussion in the language of the country which is represented.

The same considerations apply to the use of filmstrips and pictures for modern language teaching as they do elsewhere. They are only secondary experiences and not too much should be included in any picture. Each should represent one theme, e.g. the farm, the grocer's shop, the church, the dining-room and so on. Background objects, vaguely depicted, which might lead to ambiguity in identification, should be avoided. Everything should be direct and simple. Sequences of pictures, which are related in some logical way, can be used and they can form the subjects of simple composition, beginning with the building of sentences.

[1] J. Horne, 'To teachers and students of languages,' in *Look and Listen*, February, 1949.

Pictures should be dynamic in that which they convey and, even though they are static in themselves, they should give the idea of movement in the living things which they illustrate. Thus, they can be used for practice in the use of verbs. Some teachers of languages have the very useful gift of an ability to draw quickly and vitally on the blackboard to show the actions of the people and things which they describe. It is hardly possible to overrate this in language teaching.

Pictures, films and filmstrips can be used to aid the mental vision which is so necessary when a pupil is beginning to think in terms of another language and to use it freely in conversation.

When a room is set apart for language teaching it can be steeped in the 'foreign atmosphere'. The mural decorations, pictures, the calendar, the maps, the posters can all be of 'foreign' origin. Permanent diagrams on charts could show the 'rules' of grammar in tabulated form, and the phonetic alphabet can also be given in the same way, although many teachers using the direct method would be content with a 'French atmosphere' produced by pictures, maps and so on. Many children collect French (and to a lesser extent German) scrap books, using photographs, pictures from magazines and newspapers, theatre programmes, notices of school events, bus tickets, and other material obtained from the country of its origin.

Before the last war considerable quantities of first rate pictorial material was issued free by the Railway Agencies of many European countries. As far as France is concerned much of this is still available. Photographs which are taken by children during excursions abroad can be enlarged, or the pictures may be converted to filmstrip form for use in language lessons in the winter months. A number of good commercial filmstrips, suitable for language teaching, are to be found in the catalogues of the chief firms producing this material.

'Languages are windows into the world and the classroom with its national limitations has gained in the film the strongest

instrument for bringing the foreigner's life and mentality visually before the students' eyes. In general, bringing the world into the classroom will be the first function of the film and herein will be its chief value.'[1] Thus, not only will action be added to the direct method of teaching but the talking film will supply a background of the country in which the language is spoken.[2] Only residence in the country itself can improve on this at its best.

Geography

No more effective use of visual methods can be found than in their intelligent application to the teaching of geography. Every device of visual education can be pressed into the service of the geography teacher at one time or another. Visual methods should show the relations which geography has with history, economics, cartography, meteorology, astronomy, surveying, ethnology, industry, and other aspects of civilisation. Such connections lead to a fuller synthesis of studies and stress the human values of the subject.

Picture Sets. These should be collected, mounted, catalogued and stored. They should be displayed for a week or more, and should show a logical connection with one another. Each picture set should develop a single theme. After use the pictures should be dusted and preserved carefully.

Pictures can be introduced as an illustration to a short exposition in the lesson, they can become the subject of questions, and they can be used for display for some days or even a week or two as a background to the lesson scheme.

Wall Charts. Such charts, on a suitable scale, can be used for direct teaching or for semi-permanent display. Some useful material is published by

The Pilot Press,
Map Review, Bureau of Current Affairs,
Pictorial Charts, Ltd.,

[1] Horne, op. cit. [2] E.g. La famille Martin (National Committee).

Cassells. (Britain's Neighbours),

Evans Bros. Pictorial Education.

Published charts rarely show exactly what is wanted by the teacher and it is a good idea for him to produce original charts with the help of the class.

Diagrammatic and Illustrative Chart. A composite chart of illustrations from a variety of sources, possibly with a central map to illustrate a product, a trade, land, sea or air routes, a settlement, the way of life of a people.

Current Events. This should be a permanent feature of any Geography Room. Its contact with life in the world outside

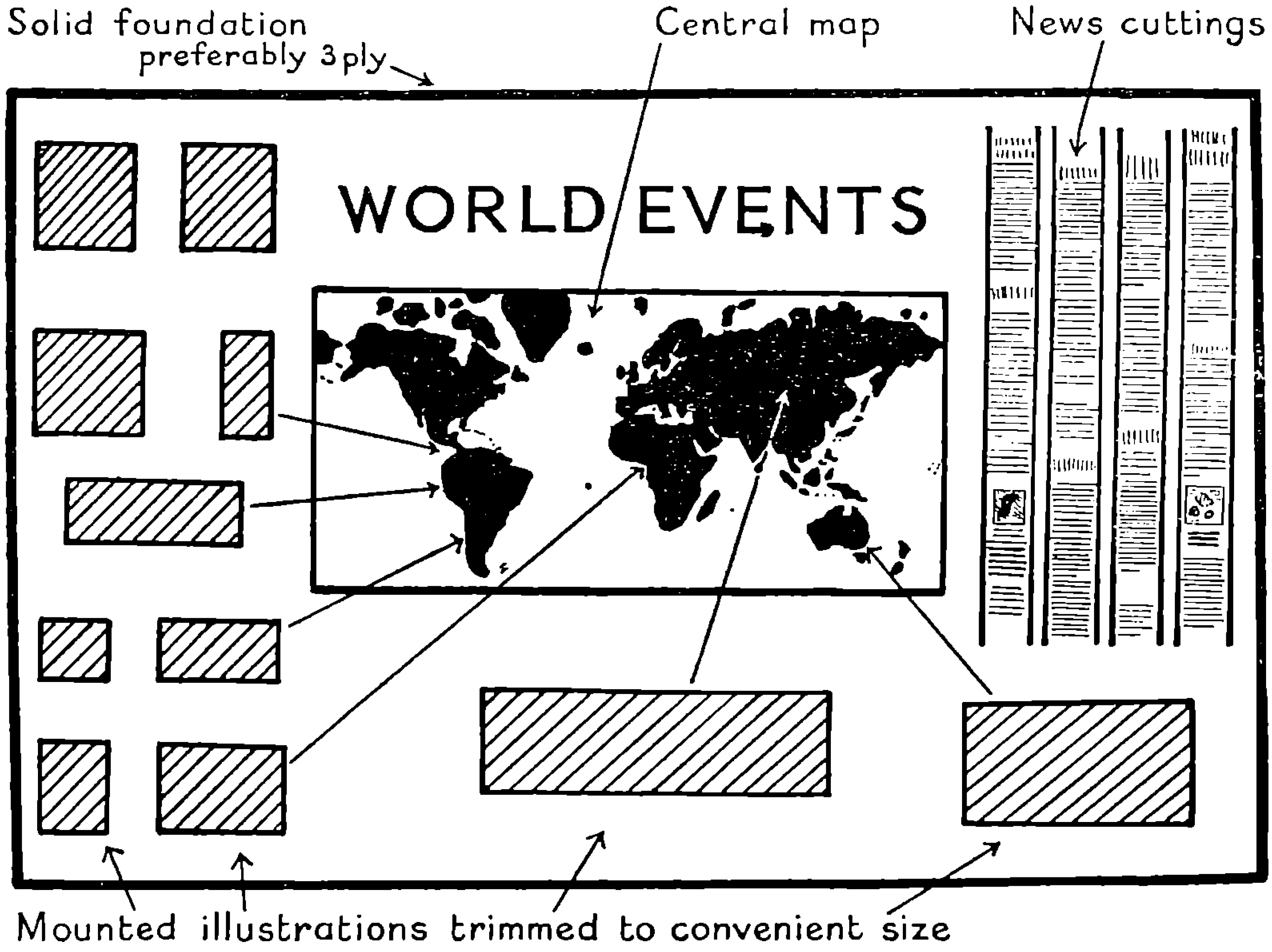

FIG. 24. A CURRENT EVENTS BOARD.

the class-room is an essential feature of geography teaching and it has a very ready appeal to children. A good rectangular board of stout plywood or other material is advised. Here is a suggestion for its arrangement.

Filmstrip. This is an excellent means of showing pictures in geography teaching. The filmstrips should show the qualities mentioned in our account of them in the section on optical projection. Many geographical filmstrips contain too many pictures. Filmstrips can be used for map work, as a part of a larger visual unit (e.g. the G.B. unit on Latitude and Longitude which also includes a sound film). Map outlines may be projected on a blackboard from filmstrip or lantern slides and chalked over quickly. Again, blank or outline maps can be projected on a screen and the positions and names of towns, rivers and other features elicited from the class, as a form of revision.

Map Work in Geography

Maps have become the traditional and accepted method of recording geographical data. It has even been suggested that 99 per cent of geography can be put on a map, but this statement requires some qualification. It is important that children should become familiar with the technique of constructing maps for various purposes and have facility for reading maps which have been made by other people. Only constant practice with the making and reading of maps of graded difficulty will achieve this. Such maps can begin at home; we can translate our local buildings, our school, playground and immediate district into the language of maps and then working from the map we can try to translate back again to actuality. The map grew up from the rough plan or sketch *which saved many words* and made an immediate appeal to the eye. Here is the starting point for map-teaching.

For special teaching purposes most maps contain far too much irrelevant material, and this detracts from their main purpose. A good working rule is : ' one principle or purpose, one map '. A succession of small ' brief ' maps of the same locality, each designed to show one, or a small selected number of facts, about it,[1] is far better than one omnibus map designed to show every-

[1] See *Man the World Over*, by Carter and Brentnall (Blackwell).

thing. Inevitably such a map defeats its own purpose by showing nothing well.

Introduction to Map Work

The first map may be devoted to the important question of the fixing the child's position in the environment, that is, the location of himself in relation to his surroundings, so inevitably we start from a familiar situation, and the most familiar environment known to the child is probably the classroom in which he spends most of his school time. So we have a picture of the classroom—its shape, particular features; doors, windows, desks and so on. The child fixes his position in this environment. The degree of skill in doing this will not be very great and there will be errors of scale, shape and even a tendency to introduce perspective, but the plan will have served its purpose. We have started on the principle of producing a map for a specific purpose, which is the first step in the process of the children producing their own visual material, so essential in geography. At a later stage we can consider the maps and show the need for some uniformity in expression so that anybody can understand the maps of everyone else. Thus, the idea of a language of maps can be hinted at.

Other special-purpose maps will follow and we can extend the principle to include the position of the room in relation to the neighbouring rooms, the whole school building and its environment. Similarly, other maps of known situations, the home for instance, are readily introduced with the intention of inculcating the essential principles of expression of ideas concerning specific localities in diagrammatic form and of special purpose. This ought to be stressed and it is sound to insist upon a ' label ' or ' title ' for every map which is produced. While this is done there should be a gradual increase of accuracy and some introduction to the problems of scale. Also every effort should be made to give the child a ' plan viewpoint ' by allowing him to see things, e.g. a large model on the floor, from above. This visual knowledge of the three-dimensional world and our skill in expressing and repre-

senting it as far as possible in two dimensions only comes with much guidance by the teacher and practice by the child. (The problems of perspective, for example, need much thought and careful teaching, and this tends to be neglected in schools at present.)

The next step is a logical one. We now have maps of localities at school and at home. Very obviously we must travel from one to the other so the next development is a ' route ' map to show the way from school to home and vice versa. The principle is now established : ever-increasing extensions in the local district and eventually outside it consolidate the idea of visual representation of geographical facts as they become appropriate, with an ever-increasing familiarity with the purpose of maps and with a growing tendency to turn to this particular form of expression in recording geographical knowledge. Map teaching can be combined with the teaching of English. The child can be asked to translate a descriptive passage e.g. concerning a street, a village or an island into map ' language '.

Alternatively, a plan or map can be given and the child asked to write in clear steps about a journey from one point to another.

We build up a logical progression in making and reading maps : school, home, neighbourhood, district, country and the world outside it, with the routes which made links between one place and another. Thus the development of map-sense proceeds from the known to the unknown, from the known facts of the immediate locality to those of the world outside, as yet unknown. An approach which is interesting to children is in the technique of ' discovery '. We start from a ' known ' part and ' discover ' the world with the explorers. We identify ourselves with Da Gama, Magellan, Cabot or Columbus, follow their routes, adding in the coastline of the countries so found, as they emerge and in this way we build up quite naturally the shape of the land-masses and the relevant data which goes with them. The history of geographical discovery serves a very useful purpose in providing a

perfectly normal and very interesting approach to the problems which are difficult to master by more traditional methods. So we have now maps of things near at home which are readily appreciated, because they can be seen, and route maps which take us eventually to outline maps of the world.

We shall eventually discover more and more facts about the people who live in the more remote parts of the world, facts concerning the physical features of these countries, weather and so on. We then are faced with the problem of recording on maps innumerable facts outside our direct experience e.g. relief, rainfall, geology, vegetation, population, economic data and many more. This demands a new technique, that of Distribution Maps which will include the many types of maps employing methods which are well known: colour, shading, stippling and symbols. At this point it would be a good step forward to try and find a uniform and simple system of colouring and symbolism, and experiments should be made with this end in view.

In tracing this sequence of Location Maps, Route Maps, Outline Maps and finally Distribution Maps these points should emerge:—

(*a*) Each map is designed to fulfil a specific purpose.

(*b*) The questions of scale and detail. The larger the scale, the greater the accuracy of the detail; as the scale grows smaller, that is, as the area to be shown increases while the size of the paper remains the same, so details disappear and only general features may be shown.

(*c*) Map work is essentially pupil's work and therefore we must devote some time to following the principles of map construction and reading. But before this is done let us consider the question of the visual presentation of maps. Wall-charts and blackboard presentation are both necessary in addition to the use of individual atlases by the pupils. Blackboard presentation is most valuable for developing a new region, or new facts concerning a region of which the broad features are known,

and in both cases, it is desirable to have displayed by chart, a map of the whole area for reference. The display of wall-maps is always a difficulty and it is a bad principle to cover a blackboard with a wall-map as it wastes valuable spaces which can be put to better use. Probably the most satisfactory method is a rail mounted upon pulleys, which may be raised or lowered as desired. In the rail are screwed cup-hooks, spaced to fit the eyelet holes on the maps. The rail is lowered, the map fixed and the rail is then raised as high as is expedient. After use the map is removed and stored. Permanent display of large sized wall charts occupies space which is normally required for illustrations or composite charts, although a permanent reference map of the world is often useful.

The optical projection of maps is not often necessary, though it is sometimes useful to give a series of maps representing decreasing areas on increasing scale to locate a town or small place at the beginning of a film. Projection of maps by filmstrips is valuable at times :

(*a*) Where the development of the map is inherent in the teaching e.g. the development of a region, of a settlement of land, sea or air trade routes and in these cases one of the most satisfactory and economical methods is on successive frames of a filmstrip. Care should be taken to make these maps with neutral grey for the background and to use shades of black and white for the map work. To show such developments in the form of succeessive filmstrip frames is a valuable teaching device.

(*b*) It is often convenient to summarise by means of a brief film with animation, development in map construction e.g. Ordnance Survey one-inch maps showing land forms in contours, the origin or springs, streams, rivers and other physical features. The relation of symbolic representation on a map with reality on the ground is always a difficult principle for the child to appreciate and the film can satisfactorily solve

this problem with techniques beyond the reach of normal practice e.g. photography of land forms, the ' aeroplane eye-view ', the view from an elevated position, church tower or hill top, land forms with contours superimposed, the same in diagrammatic form with contours and technical terms if necessary, the same in contour only, etc. Such a film can be used to sum up what has been done by field work and by plan maps, models and sandtray, in the classroom.

(*c*) The map reading of completed large scale ordnance survey maps (1 in. or 6 in. scale) can be aided by the use of suitable filmstrips. The interpretation of symbolic representations on ordnance survey maps is obviously most satisfactorily taught with map sheets and in the actual locality represented. Where this is not possible it is sometimes useful to have large scale projection by filmstrip of views of small areas, and translate both from view to map and vice versa by reference to the maps. In geography, the representation of facts by a map is an integral part of the geographer's technique, and thus the display and study of maps produced by other people are only a part and a small part of geographical knowledge. The mere copying of maps is not map work and far more important is the development of the facility of producing satisfactory maps of one's own.

Some Principles of Map Work

Purpose. It is essential that the purpose of each map should be appreciated, and all maps should have a title to explain their purpose and keys to explain any symbols or other forms of representation which may have been used upon them.

Scale. Mathematical accuracy in scale representation is not essential in the earliest maps. As the area to be represented becomes larger, the detail shown gets less, *shapes* become more prominent and characteristic, and some idea of accuracy of measurement can justifiably be introduced. Later the co-operation of the mathematics teachers should be sought, for all map making

and questions of scale are related to those of similar figures in simple geometry.

Outline. As soon as the scale becomes so small that we are mapping whole countries, we come up against the problem of outline. There are various opinions regarding the production of outline maps including the desirability of providing ready made maps *and of drawing freehand.* If we consider the principle which underlies the production of such maps we may produce an answer.

1. We wish to teach the shape of the outline,
2. we wish to produce a tidy map which is good to look at and
3. we wish to use the outline when it is finished, as it is a preliminary to the filling-in of certain map data.

Thus, the production of the outline needs to be quick, clear and reasonably accurate. A freehand drawing is not quick nor is it accurate, and an outline produced by Mapograph or Cyclostyle is often thick and clumsy in outline. Printed outlines in 'photostat' or 'copycat' copies will give a clean, clear outline, but by using them we are violating the principle that anything which a student can do for himself is far better educationally than anything which is produced for him, ready made. We can effect a compromise by tracing, and the necessary degree of accuracy and neatness is easily acquired as a skill. Moreover, it has the advantage that each time such an outline is produced, the pupil is learning the shape more precisely. Observations have been made on groups of children:

(*a*) used to prepared outlines,

(*b*) required to trace their own; and in the case of the latter group the shape of the country was known better and remembered more accurately.

Representation of Data

When the outline has been satisfactorily made there then exists the problem of inserting in it representations of certain geographical data. A popular method for young children and one designed

to enhance the visual appeal of the map is the pictorial map. There are objections to the use of such picture maps, arising from the fact that scale values cannot be strictly followed. If the pictorial devices are large enough to be seen and understood they invariably cover a considerable proportion of the available map space or conversely they are so small as to be useless. They tend to convey a false impression in the mind of the children as to the ultimate purpose of mapping. This is not to deny altogether the use of pictures, which can be very stimulating, but their place is not upon maps. Nor is the pictorial map to be confused with the pictorial diagram, where the conception of scale or the accurate comparison of quantities is carefully preserved. The pictorial map, in destroying the conception of scale and giving false ideas of relationships is usually an unsatisfactory teaching device. If we do not use the pictorial method on maps we have to find some other form of representation such as : colour, shading, stippling, symbols.

Colour. There are traditional uses of colour for maps but there is still room for research on uses of colour and their tints for more effective appeal to the eye. (There is also room for improvement in the printing of cheap maps with regard to the registration of colours in successive printing. Colour masses which overlap or spread over black outlines are very irritating.) Apart from the obvious necessity of observing the requirements for aesthetic appeal, certain psychological associations demand particular uses of colour and colour shades, e.g. for relief maps we use varying tints and shades of greens and browns. If we were to use the darker shades of colour for the lower land and the lighter shades for the higher, the map would ' look wrong ', not only because this is contrary to the traditional use of colour but the associations of the colours on the map are related in some measure to the colours of the actual scene. By preserving greens for the lower ground, browns for the higher, white for the very highest, blue for water and so on we are giving to the map a certain aspect

of reality. Similarly, for rainfall maps we could use various shades of blue to represent various differences in rainfall in different parts of a country and tints of yellow or brown for places of very scanty rainfall (deserts, etc.) Similarly, for temperatures we could use greens and blues for cold climates and reds for very hot climates. Here the psychological associations of the various shades and tints help the proper perception of the meaning of the map.

With shading as a device on maps a similar though more limited principle will apply. The darker shading will represent the heavier density or concentrations whether of population, rainfall, vegetation and so on. Various techniques of shading and cross-hatching may be employed and there should be use of the following methods :

(*a*) Parallel lines of various densities,

(*b*) cross-hatching and the use of parallel lines of different directions,

(*c*) separations of lines of different density by white spaces of different sizes.

Neatness is essential in this work, and a method should be sought by which a compromise is effected between neatness and speed of working, but this should still leave the work neat and presentable. Pride of achievement is an important factor in mapwork and no good work is produced by untidy and slovenly methods. A certain amount of time can with justification be allowed for the extra care necessary to produce neat work. Stippling or the use of dots or small patches of colour or black in various concentrations is useful for showing in a broad manner certain types of distribution, such as those of population, of agricultural and industrial products. To be well done this requires much care and there should be a fairly accurate relationship between the number of dots in any small area and the quantities represented at that place. The method allows a fairly accurate interpretation of statistics in map form and shows concentrations in a way which is not easily achieved otherwise.

When symbols are used they should be consistent, conform in the simplest way to the thing that they represent and should be easy of interpretation by reference to their shapes. The use of symbols is more common on large scale maps where shading is inappropriate e.g. the conventional symbols for swamps, coniferous trees, deciduous trees, churches, etc., are designed to represent as faithfully as possible the object to be shown. (In Indian Ordnance Survey maps there are symbolic devices to indicate Mohammedan mosque, Hindu Temple and so on.)

Relationship

Distribution maps show the relationships which exist between various data, for example, the intimate relationship between population and rainfall in India, between rainfall and vegetation, between industry, agriculture and geological structure, between ' routes ' and topographical features and so on.

These relationships are easily observed by placing a series of such special purpose maps side by side. They are even more readily observed by using the principle of superimposition of a map drawn on transparent material on a map on opaque medium. Such procedure serves to show the relation between cause and effect in geography. There are several good published devices which employ the principles of superimposition, such as, the ' Synthetic Map Sheet '[1] which consists of a number of coloured base maps showing

1. relief
2. population, and a series of transparencies to superimpose on these base maps.

This is excellent in principle, but if children were able to produce their own base maps and transparencies and preserve them in their geography note-books a useful piece of teaching work would be effected.

[1] Published by Philips, Ltd.

Sketch Maps

After a degree of skill has been acquired in map making and a familiarity with maps has grown up from constant use, sketch maps will prove most useful. Without elaborate accuracy and without conforming precisely to scale the sketch map is a very convenient method of rapidly summarising the salient features of a region. It is invaluable for revision and for field work; at its best it represents the culmination of a highly developed map sense and it is an essential tool of every geographer.

Maps are worthy of good means for their preservation. They can be hung vertically in cabinets and arranged like so many dresses or suits of clothes. This is an expensive manner of keeping them and also requires considerable space. Alternatively, large shallow drawers may be used, but care should be taken to see that all maps are kept flat, not folded and are put back in their proper order. They should be placed so that their titles are readily visible at the front of the drawer.

Roller maps should be rolled tightly and tied up with tapes. They should be stored in racks or on rails in a cupboard and not left on the top of the cupboard where they usually become indescribably dusty in time. Good modern maps are not cheap; they are of great importance as a teaching aid and as such they should be carefully preserved.

Relief maps can be made from the same materials as are used for model making. Beale[1] suggests a salt and flour mixture (2 parts salt to 1 part flour) to which a certain amount of glue is added. When dry, models made of this material, pâpier maché or Pyruma cement can be painted and varnished. Relief maps tend to be larger than most models and so require considerable quantities of material for their manufacture. They can be made in a sand-tray by making a rough contour from sand, dry earth, gravel or coke or other material. A countour map can be built up by using flat plates of strawboard or plywood of the correct

[1] Colin Beale, *Look and See*.

shape. The ' thickness ' of the material can conveniently represent a convenient difference in altitude, such as 100 feet.

Models can be widely used in geography teaching and they can be made by the methods which we have mentioned. Models of the solar system or even the earth, sun and moon will serve to show the season, day and night, tides and so on. Models are not ends in themselves and should not be made as such. They are aids to the teacher and thus take their place in a geography lesson.

Models:

(*a*) can be the subject of useful creative work by the children;
(*b*) they offer an introduction to the use of scales and proportion;
(*c*) small scale models, accurate in detail, are useful as three dimensional maps, e.g. of school buildings, a coal mine, geological strata and other features, relief of local district, rail centre, dockyard, etc.
(*d*) Simple illustrative models, not accurate to scale, are invaluable for showing a principle or process e.g. geological formations, land forms, settlements, etc. The invaluable sand tray, so cheap and yet so useful, can be included as a means of producing such models.

Weather Charts

Weather charts, the keeping of which demands observation, practical work and other activity on the part of the children, form an integral part of geography teaching. It is related to simple physics, nature study and handicraft. Maximum and minimum temperatures and barometer pressures can be recorded in graphical form, rainfall in histogram columns. A circle will show wind direction in the form of a radial pointer at any time, and a record from day to day may be given by arrows in squares, each representing the prevailing wind during the day. The length of the arrow may be proportional to the speed of the wind in that period. The graphs should be used for weather prediction and

should be related to meteorological maps. Comprehensive weather chart blanks are published by Wheaton.

It must be kept in mind that maps and plans represent on a flat surface what in reality is on a spherical or nearly spherical surface. A globe is a most important aid in the teaching of geography; and where land masses are concerned or long distances travelled by air or by water are to be considered, it is easy to trace them on the globe and then try to interpret them on the map. This involves the problem of how map projections are made, suitable projections for different purposes, and the translation of the map language to that of the globe which is really a small scale model. A large globe with the land masses outlined in white on a ' blackboard ' surface is of value. A globe suspended in the classroom with correct orientation in respect to a source of light is a good means of introducing work on the solar system, the seasons, etc.

History, Civics, Scripture

The Historical Association was early in the field with the investigation conducted by Frances Consitt and reported in her work, *The Value of Films in the Teaching of History*. This was devoted exclusively to experiments made in Leeds in 1931 with silent films. Her conclusions were that :—

1. The film helps children to learn and to remember,
2. it is of value in presenting to the children a point of view different from that of the teacher and of the usual textbook *and*
3. it compels children to find their own words to express opinions and describe scenes, not merely to borrow or reiterate those of the teacher and the textbook.

Since 1931, a considerable number of films, both sound and silent, have been made on historical subjects. Two of the Ministry of Education Visual Units are devoted to history and a third which deals with local studies is partly historical. History which deals with people, their ways of life and their reactions to their

environment, and envisages the present through the past can make good use of many types of visual approach. When we have been able to reconstruct the past to a certain extent, pictures and models will give it a reality and thus help interest and memory. Moreover, by picture and diagram methods we are able to trace, through the centuries, the evolutions of the people, their modes of life, their towns, houses and architecture, their modes of transport, their methods of eating, their dress, art, amusements, the changes in their modes of making commodities, improvements in government and so on. These make the past real and connect it with the present. It may be noted that one of the shortcomings of scripture teaching is that it deals with events which do not seem to be connected with the present and often stand vague and isolated in the past. There is no reason why this should be so, and visual methods in scripture teaching can be used effectively to make the dim figures of the past vital and important; and also by a step-by-step arrangement the historical and developmental aspect of Christianity can be traced back to the patriarchs and forward to the present day.. This surely is a matter of extreme importance in all Christian teaching.

History and Social Studies call for direct *experience*: e.g. visits to old buildings and churches, inspections of local records, visits to various departments of local government offices, local studies, museums, etc.

Secondary Experiences are also important. These include reconstructions of historical events or scenes, 'mock ups', historical plays in which pupils take part.

Models

Models are of great value in history teaching. They can be made by the class and many topics can be dealt with in this way e.g. the development of houses, towns and villages, furniture, factories, churches and other buildings, dress, transport, amuse-

ments and so on. They should be of sufficient size to maintain interest as significant objects.

Filmstrip

Apart from wall pictures and good book illustrations, filmstrips are probably the most useful of all visual methods in history teaching. Not only can photographs of historic remains, documents, museum specimens and old prints be shown, but the filmstrip can be made to function as a time chart with pictures, thus compressing the continuous evolution of certain factors in life into a short space of time. Many strips for the teaching of history contain too much material and the motto ' one theme, one strip ' should be kept in mind. A considerable number of filmstrips suitable for the teaching of history, civics and social studies are now available. The teaching of scripture still gives an opportunity for developments along these lines.

Time Charts and Time-lines

Time charts should show a consistent time scale i.e. equal periods of time should be represented by equal distances. Where events seem to be crowded into small periods of time enlargements of the scale should be used on separate charts, Time charts with pictures may be used to show various aspects of historical development, and they can be arranged in parallel horizontal fashion so that developments in housing, clothing, transport, methods of work can be seen in vertical line at any particular date. Where rooms can be set aside for history teaching, time charts can be used as frescoes.

Book Illustrations and Picture Histories

Good school history readers should be well illustrated with contemporary prints, pictures, museum specimens, pictures of buildings appropriate to each period. These should be supplemented by using filmstrips, and books of specialised picture

histories such as the excellent volumes of *The Histoty of Everyday Things in England*, by the Quennells. History scrap-books in which the pictures, specimens and drawings are obtained by the children, mounted in correct order and described in simple language at the bottom of each page are invaluable especially with the lower forms.

Much interesting pictorial material of this type may be found in the Messrs. Batsford's publications and elsewhere.

Films

Historical films should be vital and show movement. We must distinguish between the historical, factual or documentary film such as those in Houses of History and Beginnings of History which are relatively static (and at times lack movement and life, and as such are disappointing) and the films which reconstruct more or less faithfully historical events. Unfortunately, many of the latter are misleading, and when the viewer is subjected to their powerful psychological effects he is apt to imagine that he is watching the re-enaction of historical events. Teachers should beware of films which use slender or even perverted historical accounts for development into film stories. Much research is at the service of film makers and there is now no excuse for anachronisms in scenery and settings. Children should be encouraged to be critical concerning historical films and to compare their versions with those given in standard works, and discussed in school. This is particularly important in view of the spate of quasi-historical films in the cinemas at present.[1] Films such as *Medieval Village* (the open field system of farming at Laxton, Nottinghamshire) and the *English Monastery* are useful as complements to visits to such places and reading about them. (G.B. films.)

[1] An example comes to mind in the case of the history of music. 'The Great Mr. Handel' was an intelligent though not brilliant film and it followed closely events in the Composer's life. 'A Song to Remember' in spite of its brilliant colours, and good sound reproduction was entirely false in dealing with the life of Chopin.

Music

At first it may not be apparent that the teaching of music could benefit much by the use of visual aids. Music, which is to be read, is recorded in terms of visual symbols. It has certain qualities in common with other visual arts e.g. architecture, it is produced by movements, and its history and the nature of the instruments used in music making can be taught with the aid of visual methods.

Films with good sound tracks can be used, where direct experience is not possible, to show conductors and performers at work. There is still a considerable field for investigation of the possible value of films which show, in slow and in ordinary motion, the methods of performance of highly skilled players. Background films dealing with the lives of musicians and with music making generally have often not dealt honestly with the known facts of the case. The ridiculous romances which have been written round the lives of composers for the purpose of making plays or films have been misleading, and have done much damage. A number of good films on music and the performance of set pieces are obtainable from the Central Film Library. Such films require perfect synchronisation of sound and picture, good acoustical conditions both in the projector and in the room, and are usually heard to better advantage in the 35 mm. versions than in those of 16 mm. One of the Ministry of Education Visual Units is a film, with a handbook of notes and themes, entitled The Instruments of the Orchestra. The piece of music chosen is a set of Variations and a Fugue on a theme of Purcell by Benjamin Britten and is designed to show the use of each instrument in an appropriate passage (a variation suitable to its nature and compass), the use of the instruments in groups and in an orchestral tutti. The work is played by the London Symphony Orchestra and is explained and conducted by Sir Malcolm Sargent who appears in the film.

A technique which at one time was popular in the commercial cinema, in which words and music appeared on the screen and a

' dancing ball ' or pointer moved along with the music, might have some value in the group-teaching of singing at an elementary stage.

Filmstrips may be used for teaching the history of music, showing the structure of various types of composition in diagrammatic form, reproductions of original scores and so on.

Some teachers use lantern slides or filmstrips with words and music instead of laboriously writing on ruled blackboards. These have the advantage that the singers are looking upwards and are breathing better than if they were looking downwards at a score. Some harmony and counterpoint teachers have found it convenient to have their exercises projected from slides or filmstrips, so that they are then free to demonstrate at the piano. This is a better and more convenient method than that of writing on the board, for the melodic lines, chords and notes can take the exact shapes of the properly engraved scores. (It is undeniable that if individual tuition can be obtained, the co-ordination of the aural sense by listening and thinking or by thinking and then listening, the visual sense by reading the score, and the neuro-muscular sense by playing will give a better result than that which is obtained by ' mass methods '.)

Useful pictorial exhibitions with pictures, diagrams and models showing the development of musical instruments, such as the pianoforte, can be made in museums and by enthusiastic music students who are also interested in drawing, painting and the simple crafts.

Other Subjects

The filmstrip and film can be used for showing processes and operations used in handicrafts and art (e.g. planning, making pottery, using a metal-file). They should always lead to practical work which may then be checked against a further showing of the film.

A film can be used to assist training in various types of sport, athletics and physical training, dancing, etc. ' Slow motion ' can

be used to analyse the movements of experts and professionals and their technique can thus be studied at leisure. If a 16 mm. cinema camera is available, films made at ordinary speed, and if possible at greater speeds (to give ' slow motion ' in projection) are valuable to show to the pupil his own performance, and to suggest means of improving it.

The problem of film-making in schools is a big one and is outside the scope of this work. Teachers who undertake it should master the technique of the 16 mm. (or 8 mm.) movie camera, should study the works of George, Lindgren, Eisenstein and others which are given in the bibliography and should, if possible, go to a course in film-making such as those which are held by the British Film Institute.

At the outset there should be a clear understanding of the purpose and nature of the film which is planned. It may be a ' documentary ', a shorter record film or a brief ' research ' film. It should be determined that the subject is really suitable for moving picture treatment and that it cannot be ' covered ' as well by filmstrip pictures. The film should be planned as a whole and should be built up from a considerable number of short scenes. (Films of school events, sports, pageants and plays very often make extremely boring films because (*a*) they are too long (*b*) the individual scenes are too long (*c*) the individual scenes of a few seconds each have not been taken so that they follow one another naturally (*d*) not enough variety in technique or imagination in conception of the film has been used.) Gramophone records of a spoken commentary may be made quite cheaply. Attempts at domestic film-making are a great help towards the critical appreciation of the work of the professional film makers.

CHAPTER VIII

THE ORGANISATION OF VISUAL AIDS

' To-day the problem is not whether visual aids should have a place in education. This has been answered and visual aids cannot be regarded as a frill but as an integral part of modern teaching methods. It has been established beyond doubt that they bring to the class-room a sense of reality : they enlarge the experience and broaden the outlook of the children. The problem now is that of extending the benefits of visual aids to all teachers and all children.'

Rt. Hon. George Tomlinson, Minister of Education, 1948.

IN spite of the fact that in 1924 a Committee set up by the Board of Education reported favourably concerning the use of films in schools, little was done ; and only a few enthusiasts who were usually regarded as unorthodox continued and developed the work.[1] Ten years later with the improvements made in the sub-standard films and projection equipment many people engaged in education became interested, and by 1939 2,000 English schools possessed and used 16 mm. projectors. Film supplies were quite inadequate. British resources appeared to be very meagre when they were compared with those of Germany and the U.S.A. In Germany there was a magnificent organisation, independent of the Government propaganda machine, and in 1939 America had over 20,000 cinema projectors in use in schools. Since the war, the picture has changed in England, and both the Central and Local Education Authorities have taken a real interest in visual aids in education and considerable sums of money are available for developing this important field in teaching and learning.

[1] George, W. H., *The Cinema in School*, 1935. Also *The School Cinema*, by the present author in *The Schoolmaster*, May 1930.

The National Committee for Visual Aids in Education

The National Committee for Visual Aids in Education[1] is an organisation which represents the interests of Local Education Authorities and teachers in England and Wales working with the assessors of the Ministry of Education. The policy of the Committee has involved, among other things, investigations into the establishment of a suitable procedure for determination of material for production ; the choice, training and secondment of expert teacher advisers to work in collaboration with film directors ; the appropriate experimental scales of apparatus for different types of schools in the various localities; the evaluation of the suitability of projectors on the market for use in schools and colleges; the possibility of the establishment of national, regional and local visual-aids libraries; problems concerned with the carrying out of basic experiment and research on education by visual means; and the establishment of a marketing agency for the sale, servicing and distribution of visual aids. Thus, Local Education Authorities and teachers are able to suggest policy with regard to the production and use of visual aids. Complementary to the National Committee is the Educational Foundation for Visual Aids which has been set up to act as a supply agency for the sale, servicing and distribution of visual material and apparatus.[2]

A number of Local Education Authorities have established local visual aids centres and it is to be hoped that every Local Authority will soon have one. The type of arrangement which is expected in the future will comprise :

1. The school, owning its own filmstrips and a limited number of films.

[1] Planning a Visual Education Policy, Report of the National Committee for Visual Aids in Education (1948) together with recommendations for future development. (79 Wimpole Street, London, W.1.).

[2] 'General Information for Local Education Authorities and Schools,' Educational Foundation for Visual Aids, 33 Queen Anne Street, London, W.1.

2. The local visual aids library or libraries of the Local Education Authority.[1]
3. The Foundation Film Library, providing, amongst other things, through the local visual aids library films of a more specialised nature.

The National Committee for Visual Aids in Education should be regarded both as an integrating body and also a channel through which ideas concerning the modern technique of visual education must flow. The work of this body may be summarised as follows :[2]

1. The planning of a visual education policy.
2. The collection and collation of the views and proposals of Local Education Authorities, teachers and bodies concerned with education regarding film and other visual aids in schools and colleges.
3. The determination of the films which should be produced through the Ministry of Education for use in education, and the assessment for such use of films produced otherwise than in pursuance of any plan or proposals approved or initiated by the Committee.
4. The nomination, in connection with each film determined, of one or more educational advisers to be taken into consultation by the producers at all stages of production.
5. The nomination, where requested by producers, of educational advisers for films produced otherwise than in pursuance of any plan or proposal approved or initiated by the Committee.
6. The development, in co-operation with local education authorities, of regional film libraries and the encouragement

[1] An excellent example, which has done much pioneer work, is the Derbyshire School Museum Service. A large house on the outskirts of Derby contains offices, storage space for pictures, projection room, servicing workshop, studios etc., and here is maintained a supply of visual materials for Derbyshire Schools, a servicing centre for apparatus, etc.

[2] Planning a Visual Education Policy; Report of the National Committee for Visual Aids in Education.

of local education authorities in the purchase of suitable films for use in their areas and in the development of local film libraries.

7. The advising of the local authorities and the Ministry of Education on the supply, selection and maintenance of suitable apparatus.
8. Research into the subject of education by visual means through the medium of and in consultation with the National Foundation for Educational Research and by any other means available to the Committee.
9. The improvement of standards of film appreciation among children and adolescents.
10. The supply of information relating to, and the giving of guidance in the selection of films and other visual aids for the benefit of local authorities and teachers.
11. The encouragement of the provision of facilities for the training of teachers in the production and use of films and other visual aids.

The National Committee recommends that :—

Each local education authority should set up a local film library which will

(*a*) hold and lend to schools those 16 mm. films which are in everyday use.
(*b*) act as the channel through which other 16 mm. educational films are lent to schools by the Foundation Film Library.
(*c*) provide a reference library of filmstrips for use by teachers.
(*d*) undertake the distribution of film and filmstrip catalogues of the Educational Foundation for Visual Aids.

The Committee further recommends that 16 mm. and filmstrip projectors should be regarded as normal school equipment. Consequently, local authorities should have the services of a competent film librarian who is able to do film repair work, and a service engineer to keep the projectors in the area under the Authority in good working condition.

The Ministry of Education

The Ministry of Education has shown a practical interest in visual methods. It has produced a number of publications on the matter, has a Staff Inspector of Visual Methods and a number of other experts. Two committees were appointed to advise the Minister on matters pertaining to Visual Methods in Education, the provision of apparatus and material. The Ministry has assessors on the National Committee for Visual Aids in Education which will take over many of the tasks which the Ministry (and the Board of Education before it) started.

A number of Visual Units have been prepared for the Ministry, and distributed to schools through the Central Office of Information. These were primarily intended for experimental purposes.

A Visual Unit

Visual Units were used during the war, particularly in America, for the rapid training of recruits, chiefly in technical matters, in the Forces and in Industry. The possible components of a visual unit are :

1. Sound films.
2. Silent films.
3. Cine film loops.
4. Filmstrips.
5. Still photographs or prints.
6. Display screen and wall charts.
7. Scripts for Drama.
8. Models.
9. Illustrated Books.
10. Reference to other material.
11. Flip books for showing moving pictures in a simple manner by using persistance of vision.
12. Reference works.
13. A handbook of the unit.

A visual unit should be used in conjunction with activity and

effort on the part of the children. It is suggested that project work should be undertaken by the schools in order to make the visual units of real teaching worth.

The *Houses in History* unit, which was by no means an unqualified success, in that the film was exceedingly 'static' at times, also dealt with the types of houses which, for the most part, were outside the common experience of most children. Nevertheless, the contents of the film and the rest of the unit would suggest relations to local studies of the history and buildings in the neighbourhood, which can be visited, sketched and discussed by the pupils. Visits could also be made to local stone-quarries, brickworks, timber yards and other sources of building material. Frequently an association between the architecture of a locality and traditional local crafts and industries should be noted. These local crafts may be studied in relation to wider issues, social and economic, which have influenced the growth and character of the neighbourhood.

Further, the Ministry suggests that interest may be extended by forming pupils' groups or societies to study Local History and Archaeology, Social and Civic Developments, Geography and Geology. Talks by local architects, historians, builders and engineers may be followed by preparing maps of the district marking the historical buildings according to historical periods.

The Beginning of History

This unit contained a series of sound films, photographic wall panels, filmstrips including a coloured filmstrip of Celtic art, silent film on iron smelting, various models of a Bronze Age farmstead, Iron Age hill fort and prehistoric animals, and a handbook with film commentary, teacher's notes and a table of dates. The film, which is relatively slow and static in its earlier parts, should be shown in sections and used over a period of weeks. It deals with the period from Early Old Stone Age (Lower Palaeolithic, about 500,000 B.C.) to the coming of the

Romans in A.D. 43. It contains much excellent material but some of it would have suffered little had it been used in the much cheaper filmstrip form.

The Instruments of the Orchestra

A sound film (35 mm. or 16 mm.) with teacher's handbook of notes and themes (see page 197).

Local Studies

This is probably the most successful of the Ministry's Visual Units which were made up to the time of writing this book, because it suggests many lines of thought and action on the part of children and adolescents. The unit is formed from films (sound and silent) filmstrips, and pictures. It gives an account of some local studies made by young people in the Bishop Auckland district in the County of Durham.[1] The sound film is called ' Near Home ' and its musical theme is developed from the tune ' Bobby Shafto ' which has local associations.

The British Film Institute

The purpose of this body is to encourage the use and development of the cinematograph as a means of entertainment and instruction. The Institute has been in existence for more than fifteen years and in that time has created a centre devoted to information and research on film matters, a National Film Library which has more than 13,000,000 feet of film preserved in specially constructed vaults, and also it has done much to help those engaged in education to understand the value of the film and to give advice on films, equipment and its use. The Institute publishes pamphlets and periodicals concerning films and filmstrips, organises courses for teachers, appraises new productions of all types, and by means of its publication it keeps in touch with its many thousands of members. Part of the funds of the Institute is

[1] There is little need to say more about this unit for a handbook entitled Local Studies (H.M.S.O., 1s.), which has been most attractively produced, explains the unit in detail.

derived from levies on the takings of Sunday cinemas which maintain the Cinematograph Fund administered by the Privy Council.[1] The Institute has excellent overseas contacts and fifty nations are represented among its members.

Central Office of Information.[2]

This is the successor of the war-time Ministry of Information. The Central Office distributes the films and visual units made for the Ministry of Education, the Central Council of Health Education and other Government departments. Much good material which is useful in the teaching of Geography, Civics, Health can be obtained from the Central Office. The Central Film Library, housed in the Imperial Institute Building, South Kensington, S.W.7, distributes to private borrowers the films made for the C.O.I. and some others. The library sends out many thousands of 16 mm. sound films and a number of 35 mm. films each year. A complete catalogue of all the films which it keeps, with indications of their contents, is available.

A FURTHER BIBLIOGRAPHY

General Works

Material for Visual Education, Harris and Meredith, ' Daily Mail '.
The Audio-Visual Handbook, E. C. Dent, Soc. for Visual Education Inc.
Visualising the Curriculum, Hoban, Hoban and Zisman, Dryden Press.
Visual Education and the New Teacher, Meredith, ' Daily Mail '.
Audio-Visual Methods in Education, Dale, Harrap.
School Use of Visual Aids, Koon, American Office of Education.
Filmstrip, Dance and Dance, Harrap.

[1] The address of the British Film Institute is 164 Shaftesbury Avenue, London, W.C.2.

[2] The Central Office has a considerable Films Division with a Director, production and technical officers. The address of the London Headquarters is Norgeby House, Baker Street, W.1.

Audio-Visual Aids to Instruction, Exton, McGraw Hill.
Filmstrip, Falconer, McGraw Hill.
Blackboard Illustration, Perry, Manual Arts Press, Illinois.

Science

Science in Films, ed. Blodwen Lloyd, Sampson Low.
Catalogue of Films, compiled by Scientific Film Association, Aslib.
The Teaching of Science in Secondary Schools (report), Murray.
The Teaching of Science, Sumner, Blackwell.
Cine-Biology, Durden, Field and Smith, Pelican.
Optical History in Pictures, published Bausch and Lomb.
Everyday Knowledge in Pictures, published Odhams.
The Scientist in Action, George, Williams and Norgate.
Visual Aids, Weaver and Bollinger, Van Nostrand.
The Screen Projection of Chemical Experiments, Hartung, Melbourne U.P.

Mathematics

Mathematics for the Million, Hogben, Allen and Unwin.
Algebra by Visual Aids, Meredith, Allen and Unwin.
The Teaching of Arithmetic and Elementary Mathematics, Sumner, Blackwell.
Section on Mathematics in Science in Films (B. Lloyd), Vesselo, Sampson Low.
Approach to Arithmetic by the Montessori Method, Drummond, Darien.
The Nature of Mathematics, Black, Kegan Paul.
A Rhythmic Approach to Mathematics, Somervell, Philip.
A First Course in Nomography, Brodetsky, Bell.
Graphs: How to Make and Use Them, Arkin and Colton, Harper.
Mathematical Drawing, Minchin and Dale, Arnold.
Modern Mathematics for T.C. Mits, Lieber and Lieber, Allen and Unwin.
Mathematics and the Imagination, Kasner and Newman, Simon and Schuster.

Geography

Maps and Map Making, Reeves, Royal Geographical Society.
Notes on Map Reading, War Office Publication, H.M.S.O.
Visual Books, published Philip and Tacey.
Changing Britain, Brown, University of London Press.
Geological and Topographical Maps, their Interpretation and Use, Dwerryhouse, Arnold.
Maps: their History, Characteristics and Uses, Fordham, Cambridge U.P.
The Home Market, Harrison and Mitchell, Allen and Unwin.
Man, the World Over, Brentnall and Carter, Blackwell.
Maps and Map Makers, Tooley, Batsford.
The Teaching of Geography, Gopsill, Macmillan.
An Easy Guide to the Constellations, Inglis, Gall and Inglis.
National Geographical Magazine.

History, Civics, Scripture

Report on the Value of Films in the Teaching of History, Consitt, Historical Association.
The Material of English History, Weaver, Nelson.
Graphic Chart of Ancient History, Reed, Cambridge U.P.
Graphic Chart of English History, Reed, Cambridge U.P.
Graphic Charts of European History, Newman, Pitman.
Our World in the Making, Carr, Ginn.
The Architecture of England, Gibberd, Architectural Press.
The Future Citizen and his Surroundings, Morris, Batsford.
Everyday Life Series, Quennell, M. and C. H. B., Batsford.
Everyday Things in Greece, Quennell, M. and C. H. B., Batsford.
Everyday Things in England, Quennell, M. and C. H. B., Batsford.
Architecture as a Communal Art, Reilly, Batsford.
Look and See, Beale, Carey Kingsgate.
Biblical Models, Evans and Walker, National Society.
Visual Aids in the Church, Rogers and Vieth, Christian Education Press.

Drawing Bible Pictures, Whanslaw, Religious Education Press.
The Battle for Health, Taylor, Nicholson and Watson.
Local Studies (Handbook of the Unit), H.M.S.O.

(*See also the list of Isotype Books.*)

Works on Art, etc.

Education Through Art, Read, Faber and Faber.
Art and Every Man, H. Adams, Batsford.
Primitive Art, L. Adam, Pelican.
Design, Bertram, Methuen; Pelican.
Design in Daily Life, Bertram, Methuen.
Child Art to Man Art, Johnstone, Macmillan.
Visual Pleasures from Everyday Things, Pevsner, Batsford.
The Story of Art, Gombrich, Phaidon.
Everyday Knowledge in Pictures, Odhams.
Picture English, Glover, Philip.
Class Pictures for Seniors, Macmillan.
Class Pictures for Infants, Macmillan.
Art in England, ed. Lambert, Pelican.
What is Art? McColl, Pelican.
Vision and Design, Fry, Pelican.
Everyday Things in England, Quennell, M. and C. H. B., Batsford.
Everyday Things in Greece, Quennell, M. and C. H. B., Batsford.
The Painter in History, Short, Hollis and Carter.

Isotype

Isotype Books

Bildstatistik nach Wiener Methode in der Schule, Dtch. Verlag f. Jugend u. Volk. Wien-Leipzig, 1933, Otto Neurath.
Basic by Isotype, Kegan Paul, 1936, Otto Neurath.
International Picture Language, Kegan Paul, 1936, Otto Neurath.
Modern Man in the Making, Secker & Warburg 1939, Otto Neurath.

Books With Isotypes

America and Britain, 3 vols., Harrap, 1943-44.
The Soviets and Ourselves, 3 vols., Harrap 1945-47.
Face to Face with China, Harrap 1945.
Exmoor Village, Harrap, 1947.
The New Democracy Series, Nicholson and Watson.
World of Plenty, the Book of the Film, Nicholson & Watson, 1945.
Future Books, all issues, Leathley Publications.
New Biology I, Johnson and Abercrombie, Penguin Books, 1945.
Interglossa, L. Hogben, Penguin Books, 1943.
Social Security, R. Davison, Harrap, 1943.
Social Insurance, Min. of Reconstruction (H.M.S.O.), 1944.
Cicero and the Roman Republic, F. R. Cowell, Pitman, 1948.

Films with Paul Rotha

Blood Transfusion
A Few Ounces a Day
World of Plenty
Defeat Tuberculosis
Magazine Items
Land of Promise
Total War in Britain
A City Speaks
Waterworks
The World is Rich

Charcoal, Spiders Web, Sand filters.
Co-operative Agricultural Machinery.
The Story of Printing and Paper Machinery.

Children's Books

If you could see inside, M. Neurath, Max Parrish, 1948.
I'll show you how it happens, M. Neurath, Max Parrish, 1948.
Railways under London, M. Neurath, Max Parrish, 1948.
Visual History of Mankind :
Vol. I. *Living in Early Times*, Max Parrish, 1948.
Vol. II. *Living in Villages and Towns*, Max Parrish, 1948.
Vol. III. *Living in the World*, Max Parrish, 1948.
Teachers' Notes, Max Parrish, 1948.

Optics, Colour and Photography

The Science of Seeing, Mann and Pirie, Pelican.
The Science of Seeing, Luckiesh, Matthew and Moss, Macmillan.
Optical Aids, Pamphlet No. 115, H.M.S.O.
Colour Harmony for Beginners, Allen, Warne.
A Handbook of Colour, Judson, Dryad.
Optics, Cox, Focal Press.
Teaching with School Projectors, The British Film Institute.
A Manual of Photography, Mason, Gill.
Amateur Film Making, Sewell, The British Film Institute.
Light and Colour in the Open Air, Minnaert, Bell.
The British Journal Photographic Almanac, Greenwood.
The Ilford Photographic Manual, Ilford.
35 *mm. phototechnique*, Focal Press.
Colour transparencies, Focal Press.
All-in-one Camera Book, Focal Press.

Museums

Museum Service 1949, Derbyshire Education Committee.
Report on American Museum Work, Lowe, Carnegie United Kingdom Trust.
American Museums and the Child, Weston, Museums Association.
Manual for Small Museums, Coleman, Putnam.
Report on Museums and Art Galleries of the British Isles, Markham, C.U.K.T.
Report on Public Museums of the British Isles, Miers, C.U.K.T.
The Museum and the Child, Fitzjohn, Museums Association.
Public Library Law, Hewitt, Association of Assistant Librarians.
Museum Adventure, Harrison, U.L.P.
The Illustrations Collection, Corbett, Crafton.
Museums and the Schools, H.M.S.O., 1931.
Libraries and Museums, Kenyon, Benn.

PUBLICATIONS OF THE NATIONAL COMMITTEE FOR VISUAL AIDS

Progress Report.
Report on the Provision of Apparatus for Schools.
Visual Aids to Education (Beloe, R.).
Planning a Visual Aids Policy.
National Catalogue of Films, Filmstrips, etc. (in sections).

PERIODICALS

Sight and Sound (Three-monthly), British Film Institute.
Pictorial Education, Evans, Monthly.
Film User (Monthly), 174 Brompton Rd., London, S.W.7.
Visual Education (Monthly), Nat. Committee for Visual Aids.
Look and Listen (Monthly).

MAKERS OF FILMSTRIPS

Unicorn Filmstrip Library, British Industrial Films, Ltd., Chenil Galleries, King's Road, S.W.
Common Ground, Ltd., 1A Sydney Place, London, S.W.7.
Dufay Chromex, Ltd., Rhythe Works, Portsmouth Road, Thames Ditton, Surrey.
G.B. Equipments, Ltd., Film House, Wardour Street, London, W.1.
Newton & Co., Ltd., 72 Wigmore Street, London W.1.
Visual Information Service, 168A Battersea Bridge Road, London, S.W.1.
Wallace Heaton, Ltd., 127 New Bond Street, London, W.1.
Stripslides, 93 Cheyneys Avenue, Canons Park, Edgware, Middx.
Educational Publicity Ltd., East Ardsley, Wakefield.
Daily Mail School Aid Dept., New Carmelite House, London, E.C.4.
Blackheath Film Unit, Ltd., 9 North Street, Leatherhead, Surrey.

APPENDICES

(*a*) Some further Notes on Lenses

A SIMPLE lens bounded by two spherical surfaces suffers from certain inherent defects. The image produced by such a convex lens cannot be clearly focused except in the middle of the image ; distortions of size and shape will take place at the peripheries of the image (spherical aberration) and there will be unwanted colour effects in all parts of the image (chromatic aberration). Accordingly, all lenses which are used for photographic or projection work consist of a number of separate glass components so made, both as regards the curvatures of their respective surfaces and the nature of the glasses or other refracting media, that the compound lens will be free from all distorting tendencies. The edge of an image should be as clear, well defined and free from bands of colour as is the centre of the image. The difficulties of designing and making satisfactory lenses increase as a larger working aperture is required. For cameras which are required to take pictures with short exposures in poor lights, large working apertures are necessary. Again, in projection apparatus where the best use of transmitted or reflected light has to be made by the instrument (as in the substandard cinema or the episcope respectively) large-aperture lenses in relation to their focal length are essential. For instance, it is useless to try to make an episcope, other than a toy, by using a lens which will only work with an aperture of less than $1\frac{1}{2}$ or 2 inches. The working aperture of a lens is given in terms of its focal length e.g. an aperture f/8 means that the focal length of the lens is eight times the aperture. A rough and ready method of finding the focal length of a lens is to hold it horizontally so that the image of a distant object

with a distinct outline, such as a window frame at the end of a long room, falls on a piece of white paper. The focal length is approximately the distance between the clearly focused image on the paper and the middle of the lens.

All formulae concerned with calculation of image distances, focal lengths, etc., in lenses are derived from the formula :

$$\frac{1}{f} = \frac{1}{u} + \frac{1}{v}$$

where f is the focal length of the lens, u is the distance of the 'object' from 'zero' point in the lens, and v is the distance of the 'image' from the lens.[1]

The magnification which is given in diameters (linear dimensions) and *not* areas, is the number of times which the 'object' divides into the 'image' e.g. an 'object' $\frac{1}{4}$ in. high on a frame of cinema film may give an image 6 feet high on the screen. The magnification is therefore $\frac{6 \times 12}{\frac{1}{4}} = 288$.

(The area magnification would be the square of 288.)

The linear magnification is often represented by R.

$$R = \frac{\text{size of image}}{\text{size of object}} = \frac{\text{distance of image from lens}}{\text{distance of object from lens}} = \frac{v}{u}$$

also

$$R = \frac{f}{u - f} = \frac{v - f}{f} = \frac{D - 2f}{f}$$

where D is the distance between image and object, neglecting correction for the thickness and structure of the lens.

By changing the subject of the formula the following expressions for finding focal length may be useful.

$$f = \frac{u \times R}{R + 1} = \frac{v}{R + 1} = \frac{D \times R}{(R + 1)^2} = \frac{D}{R + 2} \text{ (approx.)}$$

[1] This formula is true if the distances are measured outwards from the lens. It will not serve physicists who are using concave and compound lenses, in which case the *sense* of the direction of the light must be considered.

(*b*) Reflex Copying

This is the simplest method of preparing black and white photographic copies of diagrams and pictures, though it must be stated that it has limited application in the case of half-tone blocks. Several commercial machines are available, such as the Miles Copycat. Excellent work can be done with no more apparatus than a sheet of glass, a source of light, appropriate photographic paper, developing and fixing baths.

The picture to be copied is placed flat on a table which is covered by a sheet of black rubber or similar material ; a sheet of the copying-paper is laid on it emulsion-side downwards and the whole is held down by being covered with a sheet of glass, which may be weighted at the edges if it is large enough. The time of exposure to the source of light varies with a number of factors. An average exposure with Ilford No. 3A copying-paper at a distance of 20 in. to 2 feet from the source of light, which may be a 100 watt tungsten bulb covered by a yellow screen, will be about 20 seconds for a document printed in black on a white surface. A preliminary trial with a small slip of photographic paper will serve to give a guide to finer adjustments of exposure, the time of which is not critical. The process should be conducted in a room from which daylight is excluded, but considerable red illumination will not cause fogging of these ' slow ' process-papers. Special developers containing hydroquinone are recommended for the process. They usually work quickly. After development, the negative paper is washed and fixed in a ' hypo ' solution to which some workers prefer to add a little ' hardening-solution '. The negative paper is washed for about 10 minutes and dried by being squeezed to a warm metal drying-plate. (Where this is not available the paper should be put face downwards on a glass plate or other smooth flat surface, and carefully wiped with a clean moist cloth so that all surplus water is expressed.) If some means such as hot water pipes, or an electric bulb in a square tin, can be found to heat the glass plate, the photographic paper will dry more

quickly. It will be found worth while to purchase a rubber photographic squeegee if any copying work by photographic processes is to be undertaken. If the negative is dried face upwards it will have a matt surface, and this is preferred by most workers. When the negative has dried thoroughly it is used for the printing of a positive, which may be done with another piece of the same type of paper. The process is exactly similar to the printing of ordinary positives.

The negative is laid with the emulsion side downwards on another piece of copying-paper of the same size with the emulsion side upwards and again exposed to the light above it for about a quarter of the period required for the making of the negative. The positive is developed, washed, fixed, washed again thoroughly and dried. In these processes, particularly during development, it is necessary to see that no air bubbles protect the surface of the emulsion from the chemical solutions. The sheet of exposed paper should be held at the corner, moved through the developer and agitated. This will also tend to prevent uneven and streaky development. When developers have been used and the reducing agents in them are nearly exhausted, patchy development will result. In the same way ' hypo ' solutions will fail to do their work if they are exhausted, and then green stains may result. In addition, the unexposed silver salts will not be dissolved away and the print will discolour when exposed to light. As far as is possible, freshly prepared solutions should be used in photographic work. To the photographer used to the normal process of making negatives in a camera, the principle by which the contact negatives are made in reflex copying may seem baffling, because all the light originally passes through the photographic paper, which only seems to be affected in those parts which are in contact with the ' white ' of the diagram which is to be copied. The reason is that when light passes through thin photographic emulsion of the type used for this process, little of it causes chemical changes because it is transmitted and not absorbed. That which is absorbed by the

black or dark portions of the diagram is no longer available to affect the silver salts of the paper, but that which falls on the white portions is not absorbed, to a greater or lesser degree, and is available to give a latent image in the sensitive emulsion.

This method of copying makes excellent prints for use in the episcope, it may be used for duplicating limited numbers of diagrams, etc., where real facsimiles are necessary and it is a quick and simple way of copying *at full size* pictures, printed and other matter. The expense of working this method of copying is to be thought of almost entirely in terms of the cost of the sensitised paper. It must be remembered that a single copy requires the printing of a negative as well as a positive, but after the negative has been made a considerable number of positives may be printed from it.

One of the most useful aspects of the technique of reflex-copying is that it can be readily improvised and the simple apparatus is quite portable. It is possible to incorporate the yellow filter with the glass pressure-plate. Ordinary bromide paper will give reasonable results but the commercial papers which are light in weight, homogeneous in character and coated with fairly slow fine-grained, high-contrast emulsion will give the best results. Such materials are Ilford Document Paper No. 50, Kodak Slow Kodaline and Statfile Contact Document Paper. A dark room is necessary, but more red light is permissible than in the case of the development of films. A fairly concentrated developer of a type such as Kodak D 154, Ilford ID 36 or a hydroquinone caustic solution may be used. Development is rapid, and fixing, which takes place after quick washing of the paper, is conveniently done in the 'acid hardener' type of bath. The method is excellent for line drawings and print, and half-tone blocks except those with a finer screen than 133 lines per inch. If there is insufficient contrast in the finished print the application of Farmer's reducer may help matters.

(c) Microcopying

In this the original documents are copied on a filmstrip negative. By using a device which may be regarded as a filmstrip projector and screen combined, the negative can be projected as a white image on a black surface ; or if it is required, a positive may be printed. Books can be reduced to small rolls of 35 mm. or even 16 mm. film, which can be stored in round tins and shelved until required. Besides the value of the process for making cheap and compact copies of rare works, the method is useful for research students who require copies of inaccessible books and documents. The method is also valuable for preserving records.

Three sizes have been used :

(1) 18 mm. × 24 mm. (single frame on 35 mm. film)
(2) 24 mm. × 36 mm. (double frame on 35 mm. film)
(3) 10.5 mm. × 7 5 mm. (on 16 mm. film).

It is hardly necessary to point out that the photographing of documents on 35 mm. film is a process of a character similar to that by which filmstrip negatives are made.

Commercially, the Williamson Microfilm Unit made by Kodak[1] is the most convenient machine for microcopying, or for making filmstrips but it is an expensive instrument costing several hundreds of pounds. The material is placed on a horizontal table, illuminated by four lamps, and the 35 mm. camera is capable of up-and-down movement on a vertical pillar. The shutter is operated by a foot-pedal which also turns on the film for the next exposure.

Good results can be obtained by the use of the Leica type 35 mm. camera held in a clamp so that it will take pictures of materials laid on a horizontal table some distance below. A number of teachers known to the writer have even adapted filmstrip projectors to make negatives. The lamp-mounting was removed from the lamp-house and the instrument was set up in a dark room

[1] The Recordak Division of Kodak Limited, Adelaide House, London Bridge, London, E.C.4.

with a black cloth covering it (apart from the lens aperture). Exposure was made by uncapping the lens, a suitable opaque cap having been made for the process. Small cameras such as V.P.K. (taking pictures $2\frac{1}{4}$ in. $\times 1\frac{5}{8}$ in. in size) have also been adapted for the process. 35 mm. film is wound with the full-size paper-backing on the spool of such a miniature camera. Its position is carefully determined and a trial, with a piece of undeveloped film used as a focusing screen, will suffice to fix both the focus and the size of image. It is convenient to photograph pictures of a consistent size in this process, otherwise the technique of its use becomes difficult. If the lens is not a very good one, the definition of the image, as well as the depth of focus, will be improved by diminishing its working aperture (' stopping it down '). This, of course, demands a longer exposure or more powerful illumination of the pictures to be copied. It must be stressed, however, that the lens should be capable of producing a perfectly defined and distortionless image even at the corners of the picture. The film should be ' fine grain ' and capable of giving good resolution.[1] Suitable material is Ilford Micro Negative Film (Panchromatic) and Fine Grain Safety Positive, Kodak Microfile Negative and Kodak Safety Positive 35 mm., all of which are made by using a safety cellulose-acetate base. The lighting of the object to be photographed must be fairly intense. The Ilford firm recommends two 500-watt lamps or four 100-watt lamps, and Kodak recommends two Kodalite Photoflood lamps. An exposure recommended by Kodak for two Photoflood lamps, giving oblique illumination at 2 feet from the document is $\frac{1}{2}$ second at f/16 for Safety Positive and Microfile. Pencil drawings on tracing-paper can be illuminated from behind, with a translucent diffusion-plate used to support the drawings.

The exposure time varies with the degree of reduction, because for any given aperture the light reaching the film varies inversely

[1] The Bureau of Standards, Washington, U.S.A., requires a resolution factor of 3,000 lines to the inch.

as the square of the camera extension (i.e. the distance between the lens and the film). The following table gives the relative exposures for reductions from full scale to 1–20.

Ratio of reduction	Relative exposure
1 : 20	1.1
1 10	1.2
1 : 4	1.55
1 3	1.8
1 : 2	2.25
actual size	4

It has been recommended in microcopying that type should not be reduced in the micro-negative to a size below the equivalent of .4 points, one point being equal to $\frac{1}{72}$ inch.

Owing to the considerable degree of reduction involved and the smallness of the resulting image, vibration of the camera during operation must be avoided at all costs. It is also essential that the accuracy of focus should be checked at frequent intervals and it is necessary to provide for quick finding and identification of individual frames. A numbering-device on the camera can be used to check the number of exposures and it is a good plan to photograph, at predetermined intervals, a frame bearing a large index number or letter and to title each roll at the ends. In the case of microfilm for record and reading purposes a foot of ' leader ' should be left at each end.[1]

(*d*) Making Lantern slides Photographically

Lantern plates can be obtained in three main types :

1. *Rapid* (*Black Tone*). These must be given the same treatment as bromide paper and must be opened in a dark room under an orange or yellow safe-light. Black tones may be obtained by suitable exposure, and a full development with normal ' metol-

[1] From *The British Journal Photographic Almanac* 1948. See also British Standard No. 1153—1944 ' Recommendations for the Storage of Microfilm,' British Standards Institution, 28 Victoria Street, London, S.W.1.

quinol' or amidol will be suitable. Rapid plates are especially suitable for printing by enlargement or reduction.

2. *Slow* (*Warm Tone*). Although these are slower than those mentioned above they must be opened in a dark room with a suitable safe-light. With diluted or restrained developers warm tones are readily obtained.

3. *Gaslight plates*. These are excellent for contact-printing (from $2\frac{1}{4}'' \times 3\frac{1}{4}''$ negatives for example). A yellow safe-light can be used during development. Such plates are not suitable for projection-printing, but they should prove excellent for making line diagrams or pictures from negatives which are too soft or lacking in contrast.

In comparison with bromide or gaslight prints a correctly developed slide looks too dark when it is seen in the developing dish.[1] It is recommended that a beginner should carry out some experimental exposures and developments with small strips cut from a lantern plate. It is always helpful to compare one's own work with that of a professional slide-maker, and to note the treatment which gives us the best results when the slide is put into the lantern. As is the case with filmstrip, a different treatment should be given to the slide which is to be projected on a large screen in a well-darkened room and that which is intended to give a smaller picture in a room from which all light is not excluded. In the latter case the slide should be less dense and something of the half-tones may have to be sacrificed. When the photographic positive plate has been satisfactorily produced, it is masked, titled, spotted, and bound up with a cover-glass by using black adhesive paper-strip which can be bought cheaply, made up in suitable lengths.

(*e*) Film Cleaning and Joining Media

The British Journal Photographic Almanac (1948) gives the following hints on cleaning film and filling scratches. Dirty, dusty

[1] The author finds it convenient to use a white soup-plate for this purpose.

and greasy film may be cleaned by well moistening with the following film cleaner, using chamois leather or viscose sponge, and taking care to clean both sides by using light pressure. When the film is dry (which should be in about 10 minutes), it should be polished with dry chamois leather.

Acetic acid, 1 part
Vaseline, 5 parts
Carbon tetrachloride, 100 parts.

There are also commercial preparations which clean the film and simultaneously fill scratches so that they no longer appear on an enlargement, and also considerably harden the film against further damage by abrasion.

Another device which may be useful when a very badly scratched negative has to be enlarged is to sandwich it in glycerine between cover glasses, or in the case of a miniature negative to use Canada balsam and cement it to a glass plate.

Film Cement

'Universal' film cements such as those made by Johnson will serve for celluloid, acetate and 'plastic' films. The basic ingredients of film-cement are acetone, amyl acetate and, in some cases, acetic acid. If small pieces of safety film are dissolved in alcohol or acetone a film cement, which will serve in place of a better type, may be produced.

A Film Cleaning Solution

Mix Ethyl Alcohol (*not* methylated spirit)	85 parts.
Methyl Alcohol	10 parts.
880 Ammonia	5 parts.

Pass the film through a folded chamois or linen pad moistened with the solution and held between the fingers. This is suitable for films which are moderately dirty ; those which are brittle and very dirty should be treated with the carbon-tetrachloride solution the formula for which is given above.

Waxing Solution

A waxing solution may be made by dissolving hard paraffin wax, of melting point 130 degrees F, in the proportion of one ounce of the wax to a mixture of one pint of benzene to one pint of carbon tetrachloride. After cleaning, the film is allowed to pass through the solution, all superfluous liquid is removed and the film is dried on a drum. This solution gives off a vapour which is highly inflammable and to a certain extent poisonous. It must be used with the utmost care.

(*f*) Mains Current Voltages and Resistances

Alternating current repeats its wave form fifty times a second, and can be transformed from one voltage to another by means of a static transformer of simple design. By this means voltage changes may be effected without the loss of energy which would attend the use of resistances. Damage may result by connecting projection apparatus to mains sources of the wrong voltage ; and in the case of amplifiers and other instruments containing A.C. transformers, by connecting A.C. apparatus to D.C. mains. Certain sound-film projectors such as the Gaumont-British L516 model will work on both D.C. and A.C.

Resistances may be used to cut down voltages from direct current mains. The electrical energy is then lost in the form of heat. Although projection apparatus is usually supplied with the appropriate resistances, it may happen that an emergency, which necessitates the use of a projection bulb of unusual rating, will demand the use of a different resistance.

Simple arithmetical calculations, using Ohm's Law, will solve such problems if we remember that

$$\text{Current in Ampères} = \frac{\text{Voltage}}{\text{Resistance in ohms.}}$$

$$C = \frac{E}{R}; \quad E = CR; \quad R = \frac{E}{C}$$

and wattage (of a lamp) = volts $\times$ amperès.

Ex. A lamp rated at 250 watts and designed to work on 110 volts is fed from 220 volt mains. What resistance must be added to the circuit so that the lamp is not overrun ?

$$\text{Ampères consumed by lamp} = \frac{250}{110} [=2.3 \text{ (approx.)}]$$

$$\text{Resistance of lamp} = \frac{E}{C} = 110 \div \frac{250}{110} \text{ ohms}$$

$$= \frac{12100 \text{ ohms}}{250} = 48.4 \text{ ohms}$$

A resistance connected in series with the lamp and equal to the resistance of the latter (48.4 ohms) would step down the voltage from 220 to 110 volts. The resistance would then waste, in the form of heat, a quantity of electricity equal to that consumed by the lamp. A resistance capable of carrying a current of 2.5 to 3 ampères and working upwards from, say, 40 ohms to 60 ohms would be suitable. A fixed resistance of 50 ohms would probably serve, provided that it was robust enough to carry the current without overheating.

The voltage-drop in any part of a simple circuit is proportional to the resistance in that part of the circuit. When we are in doubt we always assume that the voltage is *higher* than it is, e.g. we use the 250 v. tapping on the transformer input rather than the 200 v. to start with. If the light tends to give a yellow image and the sound from a 'talkie'-projector is thick and 'sluggish' the probability is that the voltage is lower than 250 v. In every case all effort should be made to determine the exact nature and voltage of an electricity supply, before connecting a plug to the mains.

Electricity supplies and apparatus should be protected with earth wires. Three-pin plugs should be used and the body of the projector and any metal stands should be earthed. This is particularly necessary on ground floors, concrete and other surfaces which may become damp. Although there is little danger

of a shock to earth when an operator is standing on an upper floor of polished wood on a dry day, the same precautions should be consistently taken. When direct current is used for sound-film projectors it is necessary to see that it is passing through the amplifier in the proper direction. A reversed polarity (which can be remedied by turning round the mains plug) will render the machine dumb, but when a three-pin plug is used the matter should not arise if the proper connections were made at the start.

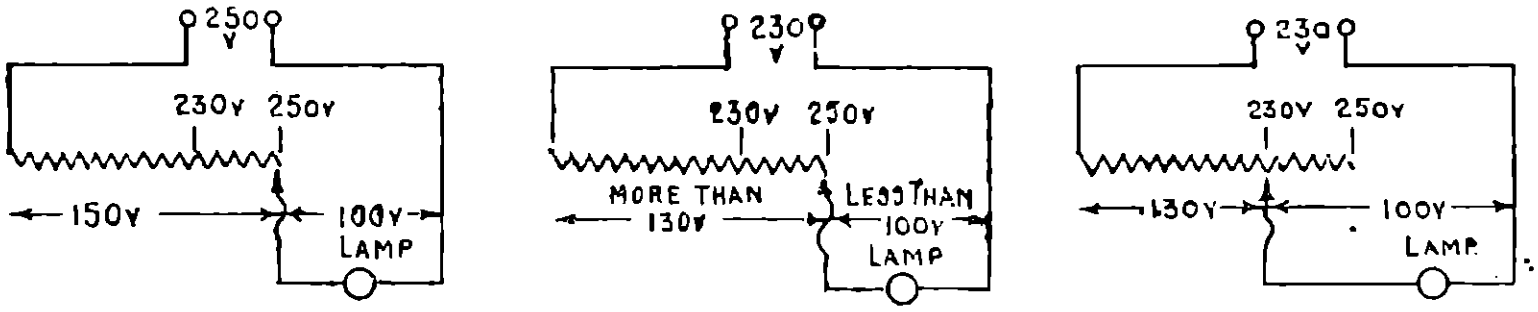

FIG. 25
DIAGRAM OF RESISTANCE IN SERIES WITH PROJECTION LAMP SHOWING VOLTAGE DROP

Some projectors only take two-pin plugs and a study should be made of their electrical circuits to make provision for an earth wire. Projectionists who use their machines in unfamiliar places should carry fuse wire. The slight extra load on starting-up a machine sometimes serves to blow old fuses which have not been renewed for years. It is important to turn off the main switch before beginning the process of fitting new fuses, and care should be taken not to use wire of larger gauge than the circuit rating will allow, otherwise delay may be caused and much inconvenience result because of damage to the 'Company's fuses', and there may be a danger from fire in faulty wiring.

(g) MAKING CHALK DRAWINGS PERMANENT

The elaborate blackboard drawing, which is often called for in science- and geography-teaching, involves the expenditure of considerable time and thought in its preparation. The work of an hour may be obliterated at the end of a period.

It has been suggested that the drawing should be done on a

large sheet of black pastel paper, and ' fixed ' by the adding of shellac varnish applied by means of an atomizing spray.[1]

The method is as follows The large sheets of black paper are pinned to a screen or wall and ordinary coloured chalks are used for the drawing. As it is difficult to remove faulty chalk lines or marks from the paper, an outlined sketch should first be made very lightly, and any superfluous marks should be removed with a clean damp cloth or a wad of cotton wool.

The varnish is made by dissolving 4 ounces of shellac in 3 pints of methylated spirit, which has to be warmed (care should be taken to prevent fire risk and the breathing of harmful fumes). The solution is filtered and further diluted with methylated spirit. It is applied by being sprayed on the drawing with an artist's ' fixing ' spray or other form of atomizer. The method may be adapted so that the air is supplied by a small motor-driven compressor, or by a glass blower's bellows with a rubber bag or ' inner tube ' used as a pressure stabilizer.

(*h*) COLOUR

The colour of an object is dependent on those components of white light falling on it which it does not absorb. Colour is a subjective phenomenon and is to be thought of in terms of a mental reaction to certain sensory impressions received through the eye. Various nerve-endings in the retina are affected according to the wave-lengths of the light which falls on them. In the history of colour-theories much confusion might have been saved had it been realised that there are both objective and subjective aspects of colour phenomena. White light can be resolved by means of a prism into a range of rainbow-colours. When it falls on an object, light is to a greater or lesser extent absorbed. Black will absorb all or most of it, and ' white ' will reflect a considerable amount. A green surface absorbs all the components of white light except

[1] F. M. Haines and J. H. G. Lebon, 'A simple method of preparing wall diagrams for classroom display,' *School Science Review* 1948.

those that combine to form the particular shade of green. Thus, an object cannot reflect a colour that is not contained in the incident light.[1] The curious monochromatic appearance of a street scene illuminated by sodium lights, or the ghastly appearance of human faces under ' mercury vapour ' illumination is known to most people. The colour values of paintings and drawings appear to be very different when they are viewed with artificial light. Nor is the matter remedied very much by the application of certain forms of ' artificial daylight ' lighting, which may be as much distorted by an excess of blue as is the warm yellow light of incandescent electric bulbs by an excess of yellow and red.

Owing to the nature of the nerve-endings of the retina all colours can be imitated by the super-imposition of three coloured lights, or alternatively, by the ' subtraction ' of colours by means of three coloured filters. To understand these simple processes we must rid our minds, for the time, of the methods of blending pigments by physical mixture as is used for making the colours required by artists. The results depend on the transparency or opacity of the pigments, the density of their application to the paper or canvas and other factors. (Good bright green and orange colours can never be made by mixing yellow and blue, and yellow and red respectively, though for the practising artist the method of pigment mixing is of great importance.)

Colours may be made *by addition*, e.g. by combining coloured lights superimposed one on another, by placing tiny points of coloured light in juxtaposition as in the Dufaycolor process, or the use of many small spots of brightly coloured pigment side by side as in a method of painting first developed by some 19th century French painters. In this method the primary colours are green, blue and red. If a piece of Dufay colour-film, bearing coloured images, is examined under a low-power microscope, the

[1] In the phenomenon of fluorescence a body may emit a wavelength which is not ' contained ' in the incident light.

way in which the colours are combined will be seen. For instance, the yellow of a daffodil is seen to be made from small transparent specks of red and green. Another simple method, for demonstrating the composition of colours by additive methods, is to take three boxes, each of which contains a tungsten electric bulb

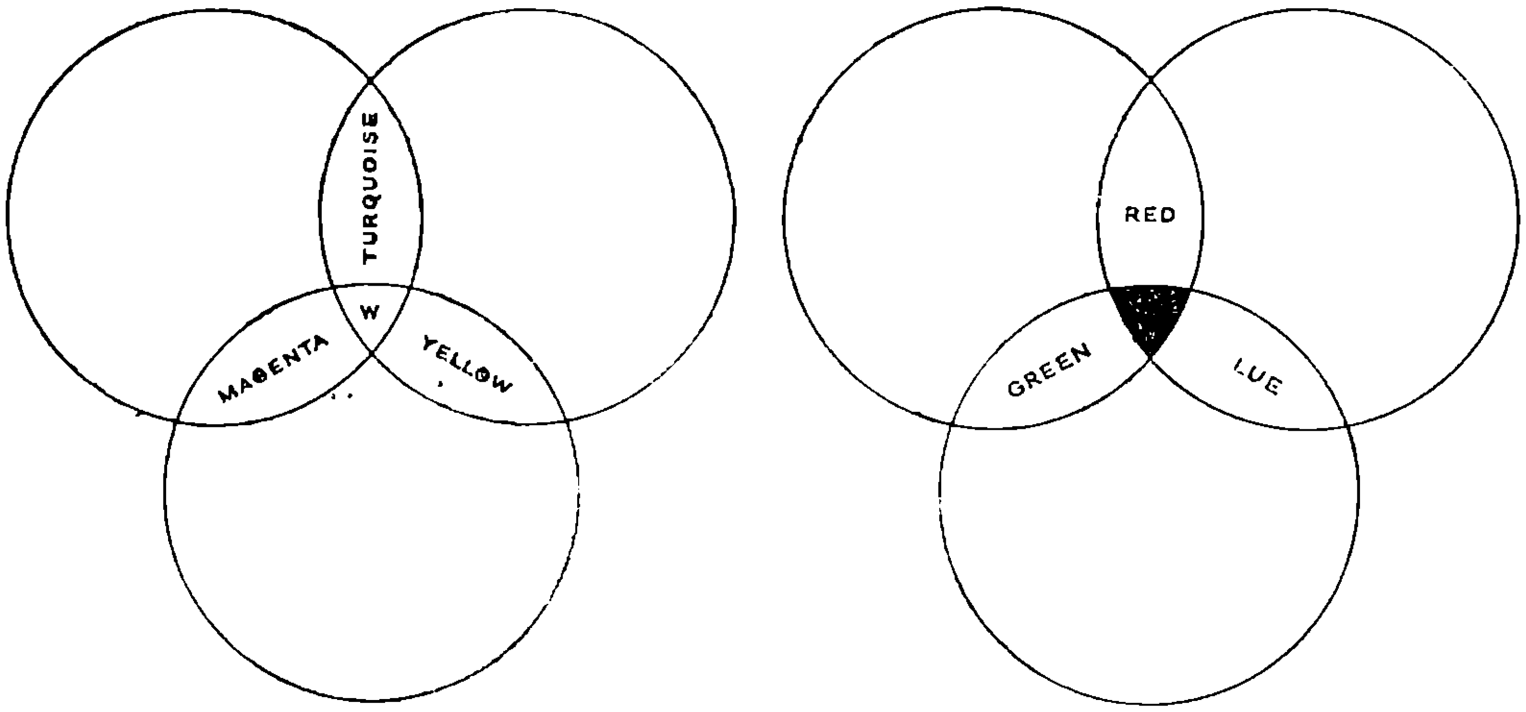

FIG. 26

The figure on left shows the production of secondary colours by the superimposition of three primary coloured lights, red, blue, and green. Note that yellow is not a primary colour. On the right we see the production of colours by subtraction. In this three circular filters of yellow, magenta, and turquoise allow the passage of certain components of white light. In the centre where they all overlap there is no common component of white light and hence this is black.

which can be controlled by a rheostat or resistance, so that it can be raised to its full voltage. A window in each box is covered with a coloured transparent filter : blue, green and red respectively. The coloured lights from the three boxes, placed side by side, can be mixed on a screen of white paper placed at some feet in front of the boxes.

From the commercial point of view, for colour printing and 35 mm. cinema films, the *subtractive process* is most valuable. If transparent dyes of yellow, magenta and turquoise have been mechanically superimposed on clear film-base there is a process which is the basis of Technicolor. When they are deposited

chemically from three superimposed sensitive emulsions, by a process which involved great scientific ingenuity in its development, we obtain Kodachrome or an analogous process.

The subtractive method of colour-building is easily demonstrated by taking three small discs of the Kodak subtractive or secondary gelatine filters (yellow, magenta, turquoise) and arranging them so that they overlap in pairs, and at the centre of the arrangement they all overlap. (Fig. 26.) If the discs are not more than $1\frac{1}{2}$ inches in diameter they can be arranged on a lantern-slide cover-glass, sandwiched with another glass plate and bound to make a permanent slide. Where the three colours are superimposed no light passes and we get black. Yellow and magenta allow their common constituent red to pass. Yellow and turquoise permit the passage of green; magenta and turquoise of blue.

Too much stress must not be laid on the physical or objective aspects of colour. Goethe, in his *Farbenlehre*, was strong in his objection to the Newtonian or prismatic theories of colour. Colour is a psychological phenomenon and as such it must be considered in its subjective aspects. The German chemist and artist, Ostwald, endeavoured to find a systematic basis for colour considered scientifically. In the Ostwald colour system the colours can be arranged as equal sectors of a circle and this will spin to produce the sensation of a neutral grey. Moreover, each colour is complementary to that which is diametrically opposite, and if two opposites are spun a neutral grey will result also. The colours are carefully standardised as *hues* so that each has the same perceptual (i.e. psychological) effect. The eight colours are Yellow, Orange, Red, Purple, Blue, Turquoise (Green Blue), Sea Green (Green), and Leaf Green (Yellow Green). All these colours are bright and attractive, and the range of greens is particularly acceptable to children. Unfortunately, the secondary pigment colours made by the older method of mixing yellow and red to give orange, and yellow with blue to give green are impure and lack luminous qualities. In the Ostwald system these difficulties are avoided.

Tints may be obtained from the hues by the admixture of white, and *shades* by adding black or dark greys to the *hues*. It is to be regarded as a psychological rather than a physical system of colour. Undoubtedly, the Ostwald system solves some of the problems of coloured chalk, pastel and poster work and there is no need to pursue here the question of its value in art teaching.[1]

[1] See the *Ostwald Colour System*, obtainable from Winsor and Newton, Ltd., 38 Rathbone Place, London, W.1.

Instead of using Ostwald colours it may be expedient to use the more common artists' colours. For convenience in working with pigments for poster or wall-charts the colours may be divided into three classes as follows :

1. The dark colours.
   Black
   Blue
   Violet
   Green
   Dark Red (Maroon)
   Brown
2. The medium colours.
   Bright Red
   Turquoise Blue
   Veridian Green
   Magenta (Rose)
   Medium Brown
3. The light Colours.
   Lemon (Chrome yellow)
   Orange
   Light Green
   Light Blue
   Light Gray
   Light Brown
   White

If a cold, dark colour is used for a background, a warm light colour used for the object will create a pleasing harmony. Any of the dark colours can be turned into medium colours by the addition of white to the cold colours and yellow to the warm colours.